THULE SWEDEN®

InfoTec

Motorhome, Caravan, Van and Compact Van Accessories

2024

InfoTec 2024

Content

Thule Awnings	3
Thule Awning Adapters	31
Thule Awning Accessories	63
Thule Smart Panels	81
Thule Awning Tents	97
Thule Awning Tent Accessories	113
Thule Roof Rack and Ladders	125
Thule Swingable Towbar	143
Thule Bike Racks	145
Thule Bike Rack Accessories	189
Thule Steps	225
Thule Vents	249
Thule Storage	255
Thule Levelers	269
Thule Locks	271
Thule Spare Parts	287

Awnings

GENERAL INFO	
Awnings - Fabrics	4
Awnings - User manual	4
Awnings - Fit Guide	5
Awnings & Adapters - Online Fit Guide for Vans and Compact Vans	7
Awnings - Installation - Operation - Specifications	8
Awnings - Accessories	10

AWNINGS	
Thule Omnistor 5200	12
Thule Omnistor 8000	15
Thule 4200	18
Thule Omnistor 5102	20
Thule 3200	21
Thule Omnistor 6300	22
Thule Omnistor 9200	26
Thule Omnistor 1200	29

AWNING ADAPTERS	
Thule Awnings & Adapters - Online Fit Guide for Vans and Compact Vans	31
Thule Awning Adapters - Fit Guide	32
Thule Awning Adapters for UK	33
Thule Awning Adapters for Wall Mounting	37
Thule Awning Adapters for T 3200	47
Thule Awning Adapters for Roof Mounting	49
Thule Awning Adapters for Vans	57

Awnings - Fabrics

- The top quality PVC fabric used for Thule Omnistor awnings is printed on both sides and has a coating. This coating keeps the fabric colour fixed, watertight, washable and durable. It not only ensures a high degree of scratch-resistance but also increases the UV-resistance and heat-resistance properties. The fabric may be rolled up for a few days, even if it is wet

- Welded joints allow a perfect waterproof and longlasting awning

- The Thule Omnistor PVC fabric consists of several layers:
  1 - Top coat of the PVC protects against scratching and fading
  2 - Vinyl with painted pattern
  3 - High strength polyester scrim
  2 - Vinyl with painted pattern
  1 - Top coat of the PVC protects against scratching and fading

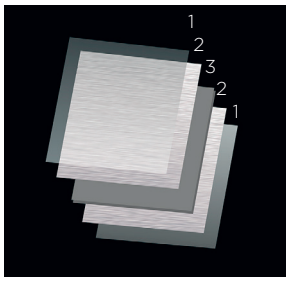

- Our fabric pattern is printed along both sides and over the entire surface (31 & 32)

- The fabric can be cleaned using the Thule PVC Cleaner

- Depending on the type of awning, you can choose different patterns for your awning fabric:
  31 - Mystic Grey
  32 - Sapphire Blue
  22 - Uni White
  07 - Uni Grey
  (see catalogues 'Motorhome and Caravan Accessories' and 'Van and Compact Van Accessories')

Awnings - User Manual

All user manuals are available on our website: www.thule.com
> Go to the product page
> Go to "Downloads"

Awnings - Fit Guide

	Motor-home	Caravan	Van	Compact Van	Length	Projec-tion	Cassette finishes	Motor
Wall-mounted Awnings								
Thule Omnistor 5200	•	•	•	•	1.92 m - 5.02 m	1.40 m - 2.50 m	Anodised White Anthra-cite	• 12 VDC
Thule Omnistor 8000	•	•			4.00 m - 6.00 m	2.75 m	Anodised White Cream Anthra-cite	• 230 VAC EM
Thule 4200	•	•	•	•	2.60 m - 4.50 m	2.00 m - 2.50 m	Anodised White Anthra-cite	
Thule Omnistor 5102 for VW T5/T6				•	2.60 m	2.00 m	Light Grey Anthra-cite	
Thule 3200				•	1.90 m - 3.00 m	2.50 m	Anodised Anthra-cite	
Roof-mounted Awnings								
Thule Omnistor 6300	•	•	•		2.60 m - 5.00 m	2.00 m - 2.50 m	Anodised White Anthra-cite	• 12 VDC
Thule Omnistor 9200	•	•			4.00 m - 6.00 m	3.00 m	Anodised White Cream	• 230 VAC EM
Rail-mounted Awnings								
Thule Omnistor 1200		•			2.30 m - 5.50 m	2.00 m - 2.50 m	White (bag)	

Thule Awnings & Adapters - Online Fit Guide for Vans and Compact Vans

Go to www.thule.com

Select "Camping & RV" and choose "Motorized awnings" or "Manual awnings"

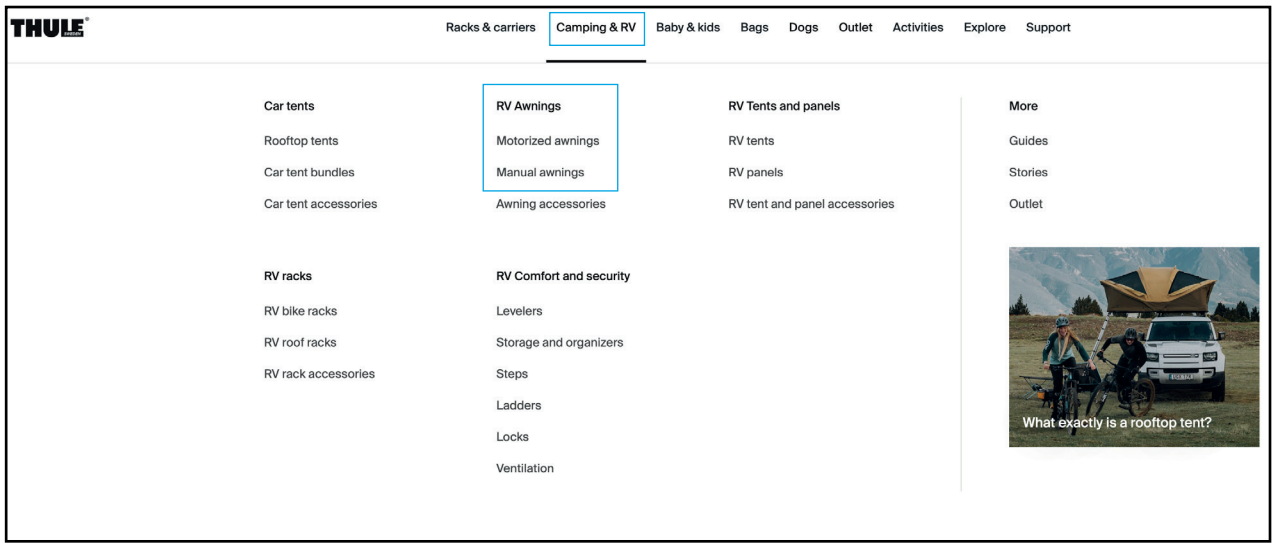

Choose "Select your Vehicle" on the left, enter the vehicle data and discover the compatible Thule RV products

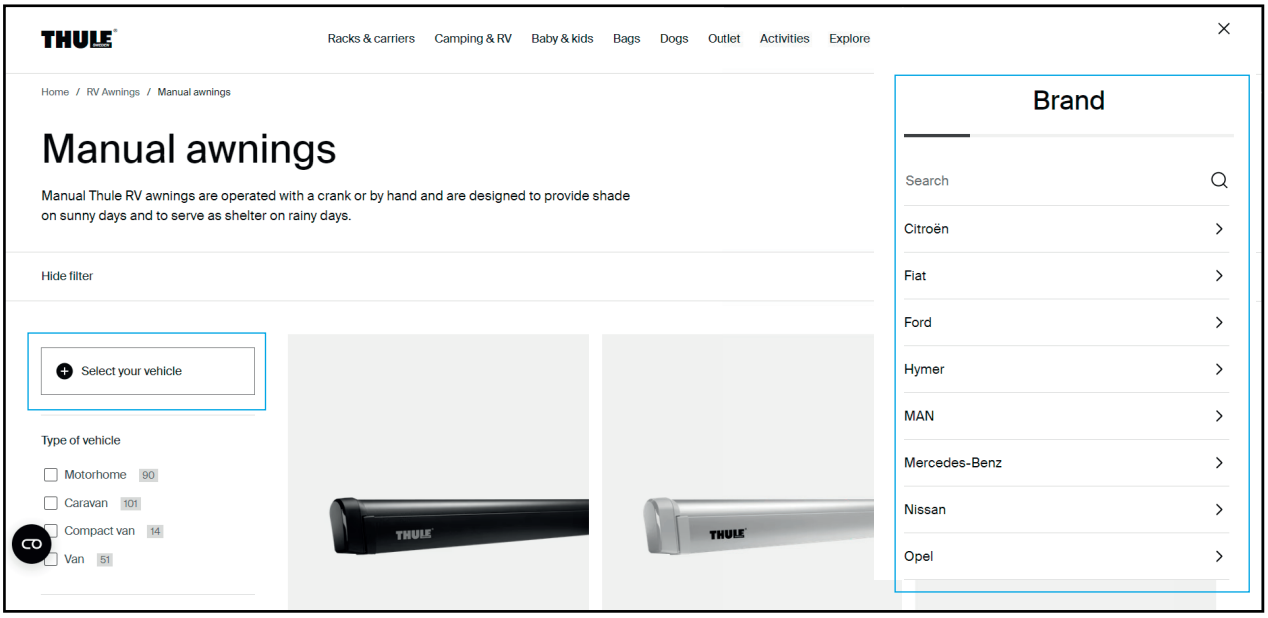

Awnings - Overview

Installation - Operation - Specifications

	WALL-MOUNTED				
	5200	8000	4200	5102	3200
INSTALLATION					
On a motorhome	•	•	•		
On a caravan	•	•	•		
On a van	•		•		
On a compact van	•		•	•	•
Installation on the wall	•	•	•	•	•
Installation on the roof					
Installation in the caravan rail	•	•			
Installation on a roof rack					•
Flat adapter supplied as standard	•	•	•	• ***	
OPERATION					
Fast gear	•	•	•	•	
By hand					•
Available with motor	• 12 VDC	• 230 VAC EM			
Spring arms	•	•	•	•	
Manual tension arms					•
SPECIFICATIONS					
Minimum box length	1.92 m	4.00 m	2.60 m	2.60 m	1.90 m
Maximum box length (without motor)*	5.02 m	6.00 m	4.50 m	2.60 m	3.00 m
Minimum projection	1.40 m	2.75 m	2.00 m	2.00 m	2.50 m
Maximum projection **	2.50 m	2.75 m	2.50 m	2.00 m	2.50 m
Minimum weight	14.2 kg	41.4 kg	18.4 kg	19.8 kg	12 kg
Maximum weight (without motor)	32.8 kg	55.4 kg	27.6 kg	19.8 kg	16.9 kg
Integrated tension arms	•	•	•		
Quick-Lock system	•	•		•	•

* The fabric is approximately 20 cm shorter than the box length

** The maximum projection is only possible in combination with longer lengths. Please consult the technical specifications for more information. Projection is measured from rear of awning box to the front of the lead rail

*** Special brackets for VW T5

Awnings - Overview

Installation - Operation - Specifications

	ROOF-MOUNTED		CARAVAN RAIL
	6300	9200	1200
INSTALLATION			
On a motorhome	•	•	
On a caravan	•	•	•
On a van	•		
On a compact van			
Installation on the wall			
Installation on the roof	•	•	
Installation in the caravan rail			•
Installation on a roof rack			
Flat adapter supplied as standard			
OPERATION			
Fast gear	•	•	
By hand			•
Available with motor	• 12 VDC	• 230 VAC EM	
Spring arms	•	•	
Manual tension arms			•
SPECIFICATIONS			
Minimum box length	2.60 m	4.00 m	2.30 m
Maximum box length (without motor)*	5.00 m	6.00 m	5.50 m
Minimum projection	2.00 m	3.00 m	2.00 m
Maximum projection **	2.50 m	3.00 m	2.50 m
Minimum weight	20.6 kg	42.4 kg	9 kg
Maximum weight (without motor)	35.6 kg	57.6 kg	20 kg
Integrated tension arms	•	•	
Quick-Lock system	•	•	•

* The fabric is approximately 20 cm shorter than the box length

** The maximum projection is only possible in combination with longer lengths. Please consult the technical specifications for more information. Projection is measured from rear of awning box to the front of the lead rail

Awnings - Overview
Accessories

	WALL-MOUNTED				
	5200	8000	4200	5102	3200
ADAPTERS					
Thule Roof Adapters					
Thule Wall Adapters	•	•	•	•	
SMART PANELS					
Thule Rain Blocker G2 Front	•	•	•	•*	•*
Thule Rain Blocker G2 Side	•	•	•	•*	•*
Thule Sun Blocker G2 Front	•	•	•	•	•
Thule Sun Blocker G2 Side	•	•	•	•	•*
Thule View Blocker G2 Side	•		•		
Thule View Blocker Front	•	•	•	•	
Thule Rain Blocker Side					
Thule Windscreen	•	•	•	•	
TENTS					
Thule Veduta					
Thule Panorama	•	•			
Thule Residence G3	•	•	•	•*	
Thule QuickFit	•	•	•		
WIND PROTECTION					
Thule Hold Down Kit	•	•	•	•	
Thule Hold Down Side Strap Kit	•	•	•	•	•
Thule Tension Rafter G2	•	•	•		
Thule 3rd Support Leg (as of 3.75 m)	•	•			
SEALINGS					
Thule Sealing Rubber	•	•	•*		
Thule EPDM Sealing					
Thule Gutter	•	•	•	•	
MOTORISATION					
Thule Motor Kit TO 8000/9200 (230 VAC EM)		•			
Thule Motor Kit TO 5200 (12V)	•				
Thule Motor Kit TO 6300 (12V)					
LIGHTING					
Thule LED Strip	•	•	•	•	
Thule LED Strip Sideways					
Thule LED Mounting Rail TO 6300/9200					
Thule Tent LED Mounting Rail TO 5200	•				
Thule Tent LED Mounting Rail TO 6300					
MAINTENANCE					
Thule PVC Cleaner	•	•	•	•	•
Thule Repair Patch	•	•	•	•	•

* Specific model

Awnings - Overview

Accessories

	ROOF-MOUNTED		CARAVAN RAIL
	6300	9200	1200
ADAPTERS			
Thule Roof Adapters	•	•	
Thule Wall Adapters			
SMART PANELS			
Thule Rain Blocker G2 Front	•	•	•
Thule Rain Blocker G2 Side	•	•	•*
Thule Sun Blocker G2 Front	•	•	•
Thule Sun Blocker G2 Side	•	•	•*
Thule View Blocker G2 Side	•		
Thule View Blocker Front	•	•	•
Thule Rain Blocker Side			
Thule Windscreen	•	•	•
TENTS			
Thule Veduta	•		
Thule Panorama	•	•	
Thule Residence G3	•	•	
Thule QuickFit	•	•	•
WIND PROTECTION			
Thule Hold Down Kit	•	•	•
Thule Hold Down Side Strap Kit	•	•	•
Thule Tension Rafter G2	•	•	•*
Thule 3rd Support Leg (as of 3.75 m)	•	•	•
SEALINGS			
Thule Sealing Rubber			
Thule EPDM Sealing	•	•	
Thule Gutter	•	•	•
MOTORISATION			
Thule Motor Kit TO 8000/9200 (230 VAC EM)		•	
Thule Motor Kit TO 5200 (12V)			
Thule Motor Kit TO 6300 (12V)	•		
LIGHTING			
Thule LED Strip	•	•	
Thule LED Strip Sideways	•		
Thule LED Mounting Rail TO 6300/9200	•	•	
Thule Tent LED Mounting Rail TO 5200			
Thule Tent LED Mounting Rail TO 6300	•	•	
MAINTENANCE			
Thule PVC Cleaner	•	•	•
Thule Repair Patch	•	•	•

* Specific model for Thule Omnistor 1200

Thule Omnistor 5200

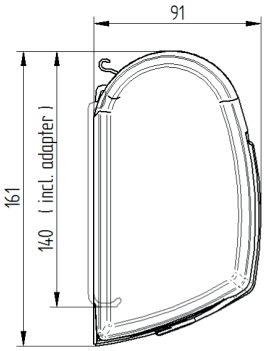

INFO

- Installation — Wall mounting
- Length — 1.92 m - 5.02 m
- Projection — 1.40 m - 2.50 m
- Cassette — White
  Anodised: not with fabric 22
  Anthracite: 2.62 m - 5.02 m - only fabric 31 (Mystic Grey)
- Fabric — 31 – Mystic Grey
  32 – Sapphire Blue
  22 – Uni White
- Weight — 14.2 kg - 32.8 kg (without motor)
  Motorised version: +1 kg

FEATURES

- Flat adapter delivered as standard. Special adapters for wall mounting need to be ordered separately
- Perfect fabric tension: sturdy spring arms with patented integrated tension arms ensure a perfectly tensioned awning fabric for increased wind resistance. Standard integrated for awning lengths from 4.02 m and more, optional for a 3.02 m or 3.52 m awning length
- Thule Quick Release support legs:
  - sturdy metal connection parts
  - easy unlocking and storing into the lead rail of the awning
  - can be removed vertically from the lead rail: no risk of damaging the vehicle wall
  - inner arm remains blocked during the set up
- Thule Quick-Lock: user-friendly system to help you set up and adjust the support legs to the right heights
- Optional Thule Tent LED Mounting Rail TO 5200:
  - covers the gap under the awning = wall adapters are no longer visisble
  - possible to mount a Thule QuickFit awning tent thanks to the integrated rail
  - possible to hang up the Thule Organizers
  - possible to add a Thule LED Strip
- Thule look:
  - matches the contemporary RV design
  - better integrated on the vehicle side
- Optional 12V DC motor:
  - operate awning lengths from 3.00 m and more without any effort
  - control is made with a switch through one touch command
  - integrated manual override with hand crank in case of power failure
  - can be retrofit installed as an accessory on a manual Thule Omnistor 5200 from awning length 3.00 m (+ 1kg)
- Patented roller tube support for better fabric tension and reduced wrinkling of the fabric
- Easy roller tube adjustment: perfect closing of the cassette on the side opposite to the gear
- Improved masking and finish of the technical parts
- Integrated anti-rattling solutions
- Integrated fixation for an optional 3rd support leg to ensure a higher stability (from 3.75 m awning length)
- Increased reliability: built-in durable systems for long life performance
- Thule Adjustable Pitch system: the incline of the awning fabric can be set as you please to easily open the door of your vehicle without touching the awning fabric

ACCESSORIES

- Thule Wall Adapters
- Thule Motor Kit TO 5200
- Thule Tent LED Mounting Rail TO 5200
- Thule LED Strip
- Thule Tension Arm Set TO 5200
- Thule Tension Rafter G2
- Thule 3rd Support Leg
- Thule Hold Down Kit
- Thule Hold Down Side Strap Kit
- Thule Sealing Rubber
- Thule Gutter
- Thule Sun Blocker G2 Front
- Thule Sun Blocker G2 Side
- Thule Rain Blocker G2 Front
- Thule Rain Blocker G2 Side
- Thule View Blocker G2 Side
- Thule View Blocker Front
- Thule Windscreen
- Thule Panorama
- Thule Residence G3
- Thule QuickFit

MAINTENANCE

- Thule PVC Cleaner
- Thule Repair Patch

THULE OMNISTOR 5200 - MANUAL					
LENGTH	PROJECTION	WEIGHT	CASSETTE	FABRIC	SKU N°
1.92 m	1.40 m	14.2 kg	White	22 Uni White	301005
				31 Mystic Grey	301003
				32 Sapphire Blue	301004
			Anodised	31 Mystic Grey	301103
2.32 m	1.80 m	17 kg	White	22 Uni White	301015
				31 Mystic Grey	301013
				32 Sapphire Blue	301014
			Anodised	31 Mystic Grey	301113
2.62 m	2.00 m	19 kg	White	22 Uni White	301025
				31 Mystic Grey	301023
				32 Sapphire Blue	301024
			Anodised	31 Mystic Grey	301123
				32 Sapphire Blue	301124
			Anthracite	31 Mystic Grey	301203
3.02 m	2.50 m	22.6 kg	White	22 Uni White	301035
				31 Mystic Grey	301033
				32 Sapphire Blue	301034
			Anodised	31 Mystic Grey	301133
				32 Sapphire Blue	301134
			Anthracite	31 Mystic Grey	301213
3.15 m	2.50 m	24.6kg	Anthracite	31 Mystic Grey	301220 *
3.52 m	2.50 m	25.4 kg	White	22 Uni White	301045
				31 Mystic Grey	301043
				32 Sapphire Blue	301044
			Anodised	31 Mystic Grey	301143
				32 Sapphire Blue	301144
			Anthracite	31 Mystic Grey	301223
3.75 m	2.50 m	27.4 kg	Anthracite	31 Mystic Grey	301230 **

* Special model for Ducato/Jumper/Boxer Van with Lift Roof - mounted with Ducato H2 Lift Roof Adapter - 301950

** Special model for Ducato/Jumper/Boxer Van with Lift Roof - mounted with Ducato H2 Lift Roof Adapter - 301951

LENGTH	PROJECTION	WEIGHT	CASSETTE	FABRIC	SKU N°
4.02 m	2.50 m	28 kg	White	22 Uni White	301055
				31 Mystic Grey	301053
				32 Sapphire Blue	301054
			Anodised	31 Mystic Grey	301153
				32 Sapphire Blue	301154
			Anthracite	31 Mystic Grey	301233 *
4.52 m	2.50 m	30.4 kg	White	22 Uni White	301065
				31 Mystic Grey	301063
				32 Sapphire Blue	301064
			Anodised	31 Mystic Grey	301163
				32 Sapphire Blue	301164
			Anthracite	31 Mystic Grey	301243
5.02 m	2.50 m	32.8 kg	White	22 Uni White	301075
				31 Mystic Grey	301073
				32 Sapphire Blue	301074
			Anodised	31 Mystic Grey	301173
				32 Sapphire Blue	301174
			Anthracite	31 Mystic Grey	301264

* Special model for Ducato/Jumper/Boxer Van with Lift Roof - mounted with Ducato H2 Lift Roof Adapter - 301940

THULE OMNISTOR 5200 - WITH MOTOR					
LENGTH	PROJECTION	WEIGHT	CASSETTE	FABRIC	SKU N°
3.05 m	2.50 m	23.6 kg	White	31 Mystic Grey	301080
			Anodised		301180
			Anthracite		301190
3.55 m	2.50 m	26.4 kg	White	31 Mystic Grey	301081
			Anodised		301181
			Anthracite		301191
4.05 m	2.50 m	29 kg	White	31 Mystic Grey	301082
			Anodised		301182
			Anthracite		301192
4.55 m	2.50 m	31.4 kg	White	31 Mystic Grey	301083
			Anodised		301183
			Anthracite		301193
5.05 m	2.50 m	33.8 kg	White	31 Mystic Grey	301084
			Anodised		301185
			Anthracite		301198

Thule Omnistor 8000

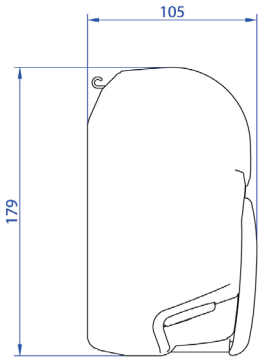

INFO

• Installation	Wall mounting
• Length	4.00 m - 6.00 m
• Projection	2.75 m
• Cassette	White Anodised Cream: only with fabric 31 (Mystic Grey) Anthracite: only with fabric 31 (Mystic Grey)
• Fabric	31 – Mystic Grey 32 – Sapphire Blue 22 – Uni White
• Weight	41.4 kg - 55.4 kg (without motor) 43.6 kg - 57.6 kg (including motor)

PERFECT FABRIC TENSION

- Improved stability of the complete awning thanks to the integration of automatic tension rafters in both spring arms
- The tension rafters can easily be locked when maximal tension is reached by turning both buttons in the lead rail with 90°
- The perfect tension is achieved by retracting the fabric with the remote control or hand crank
- The new, more powerful motor improves this fabric tension even more when customers want to combine additional Thule accessories

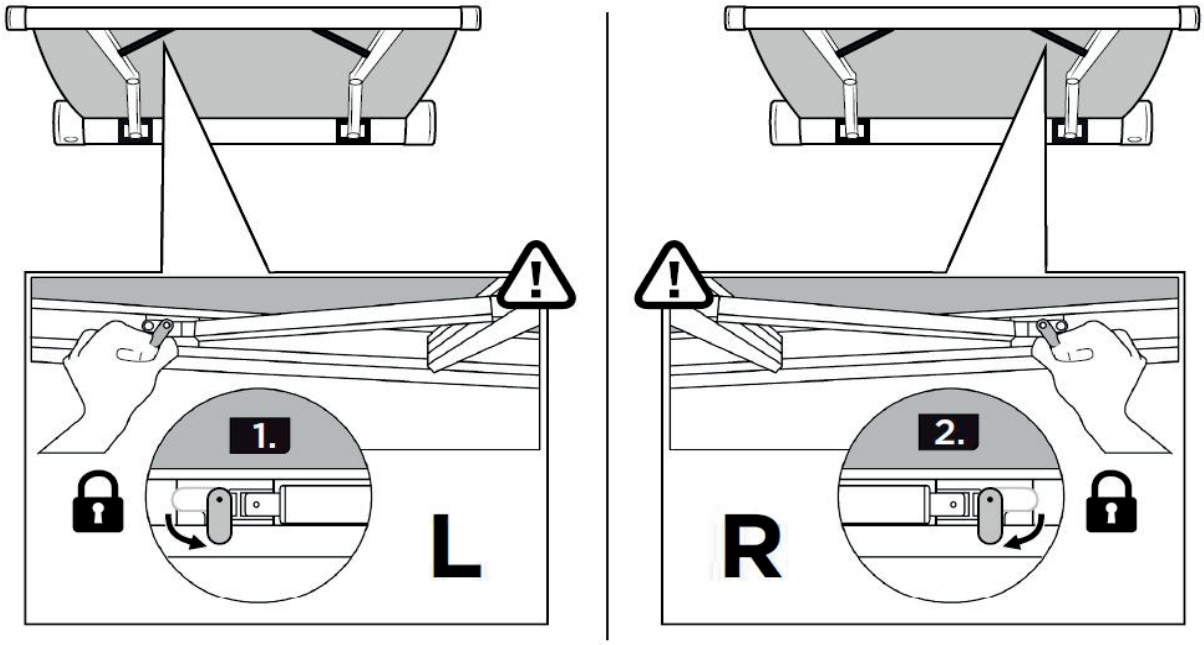

FEATURES

- Flat adapter delivered as standard. Special adapters for wall mounting need to be ordered separately
- Perfect fabric tension: sturdy spring arms with integrated tension arms ensure a perfectly tensioned awning fabric for increased wind resistance

- Spring arms:
  - reinforced with a double steel cable
  - the automatically deployed tension rafters absorb movement to ensure stability and wind-resistance
- Front profile with integrated drainage system
- Locking system on manual awnings TO 8000: prevents the awning from opening while the vehicle is moving, works automatically when closing the awning
- Optional 230 VAC EM motor with remote control:
  - operate the awning without any effort
  - electronic system ensures a perfect closing of the front profile
  - mechanical settings prevent the awning fabric being rolled up in the wrong way
  - a safety device enables you to operate the awning manually in case of electricity failure
  - can be retrofit installed as an accessory on a manual Thule Omnistor 8000 awning (+ 2.1 kg)
  - possibility to operate with optional wall switch
- Thule Quick-Lock: user-friendly system to help you set up and adjust the support legs to the right heights

THULE OMNISTOR 8000 - MANUAL					
LENGTH	**PROJECTIOIN**	**WEIGHT**	**CASSETTE**	**FABRIC**	**SKU N°**
4.00 m	2.75 m	41.4 kg	Anodised	31 Mystic Grey	308683
				32 Sapphire Blue	308701
			White	22 Uni White	307717
				31 Mystic Grey	308728
				32 Sapphire Blue	308698
			Cream	31 Mystic Grey	308979
4.50 m	2.75 m	44.6 kg	Anodised	31 Mystic Grey	308708
				32 Sapphire Blue	308709
			White	22 Uni White	307725
				31 Mystic Grey	308679
				32 Sapphire Blue	308703
			Cream	31 Mystic Grey	308912
5.00 m	2.75 m	48.2 kg	Anodised	31 Mystic Grey	308710
				32 Sapphire Blue	308711
			White	22 Uni White	307733
				31 Mystic Grey	308704
				32 Sapphire Blue	308705
			Cream	31 Mystic Grey	308971
			Anthracite	31 Mystic Grey	301672
5.50 m	2.75 m	51.8 kg	Anodised	31 Mystic Grey	308712
				32 Sapphire Blue	308713
			White	22 Uni White	307741
				31 Mystic Grey	308706
				32 Sapphire Blue	308707
			Cream	31 Mystic Grey	308972
			Anthracite	31 Mystic Grey	301673
6.00 m	2.75 m	55.4 kg	Anodised	31 Mystic Grey	308714
				32 Sapphire Blue	308715
			White	22 Uni White	307749
				31 Mystic Grey	308729
				32 Sapphire Blue	308718
			Cream	31 Mystic Grey	308978
			Anthracite	31 Mystic Grey	301674

THULE OMNISTOR 8000 - WITH MOTOR					
LENGTH	PROJECTION	WEIGHT	CASSETTE	FABRIC	SKU N°
4.00 m	2.75 m	43.6 kg	Anodised	31 Mystic Grey	302611
				32 Sapphire Blue	302612
			White	22 Uni White	302640
				31 Mystic Grey	302601
				32 Sapphire Blue	302602
			Cream	31 Mystic Grey	302621
4.50 m	2.75 m	46.8 kg	Anodised	31 Mystic Grey	302613
				32 Sapphire Blue	302614
			White	22 Uni White	302641
				31 Mystic Grey	302603
				32 Sapphire Blue	302604
			Cream	31 Mystic Grey	302623
5.00 m	2.75 m	50.4 kg	Anodised	31 Mystic Grey	302615
				32 Sapphire Blue	302616
			White	22 Uni White	302642
				31 Mystic Grey	302605
				32 Sapphire Blue	302606
			Cream	31 Mystic Grey	302625
			Anthracite	31 Mystic Grey	302631
5.50 m	2.75 m	54.0 kg	Anodised	31 Mystic Grey	302617
				32 Sapphire Blue	301618
			White	22 Uni White	302643
				31 Mystic Grey	302607
				32 Sapphire Blue	302608
			Cream	31 Mystic Grey	302627
			Anthracite	31 Mystic Grey	302633
6.00 m	2.75 m	57.6 kg	Anodised	31 Mystic Grey	302619
				32 Sapphire Blue	302620
			White	22 Uni White	302644
				31 Mystic Grey	302609
				32 Sapphire Blue	302610
			Cream	31 Mystic Grey	302629
			Anthracite	31 Mystic Grey	302635

ACCESSORIES

- Thule Wall Adapters
- Thule Motor Kit TO 8000
- Thule LED Strip
- Thule Tension Rafter G2
- Thule 3rd Support Leg
- Thule Hold Down Kit
- Thule Hold Down Side Strap Kit
- Thule Sealing Rubber
- Thule Gutter
- Wall switch for TO 8000 EM 230V
- Thule Sun Blocker G2 Front
- Thule Sun Blocker G2 Side
- Thule Rain Blocker G2 Front
- Thule Rain Blocker G2 Side
- Thule View Blocker Front
- Thule Windscreen
- Thule Panorama
- Thule Residence G3
- Thule QuickFit

MAINTENANCE

- Thule PVC Cleaner
- Thule Repair Patch

Thule 4200

INFO

• Installation	Wall mounting
• Length	2.60 m - 4.50 m
• Projection	2.00 m - 2.50 m
• Cassette	White Anodised Anthracite
• Fabric	31 – Mystic Grey
• Weight	18.4 kg - 27.6 kg

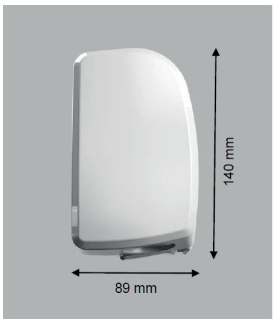

T 4200 - standard version

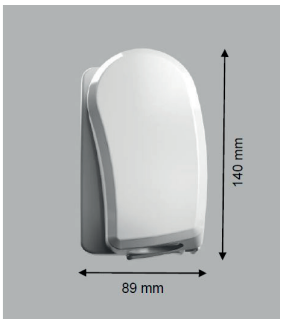

T 4200 - automotive version

FEATURES

- Sleek design to obtain the best integration on the motorhome or compact van through new, vehicle-specific end cap shapes (automotive/standard)
- Easy-to-use telescopic hand crank
- New, easy-to-apply patented sealing concept
- Awning lengths of 4.00 m and 4.50 m have a high-quality Thule Tension Rafter G2 supplied as standard. Pre-installed Tension Rafter pieces for maximum comfort
- Perfect clamping force support leg
- Improved storage of support legs in the lead rail
- Integrated anti-rattling solutions
- Flat adapter delivered as standard. Special adapters for wall mounting need to be ordered separately
- Patented roller tube support for better fabric tension and reduced wrinkling of the fabric
- Easy roller tube adjustment: perfect closing of the cassette on the side opposite to the gear
- The oval support legs are dropped vertically to reduce the risk of damaging the vehicle wall
- Suitable for a slim and round design
- Lightest of its category: 18.4 kg for 2.60 m awning
- Contemporary look

ACCESSORIES

- Thule Wall Adapters
- Thule LED Strip
- Thule Tension Rafter G2
- Thule Hold Down Kit
- Thule Hold Down Side Strap Kit
- Thule Sealing Rubber
- Thule Gutter
- Thule Sun Blocker G2 Front
- Thule Sun Blocker G2 Side
- Thule Rain Blocker G2 Front
- Thule Rain Blocker G2 Side
- Thule View Blocker G2 Side
- Thule View Blocker Front
- Thule Windscreen
- Thule Residence G3
- Thule QuickFit

MAINTENANCE

- Thule PVC Cleaner
- Thule Repair Patch

THULE 4200						
LENGTH	END CAP VARIANT	PROJECTION	WEIGHT	FABRIC	CASSETTE	SKU N°
2.60 m	automotive	2.00 m	18.4kg	31 - Mystic Grey	White	302800
					Anodised	302810
					Anthracite	302820
3.00 m	automotive	2.50 m	21.1 kg	31 - Mystic Grey	White	302802
					Anodised	302812
					Anthracite	302822
3.50 m	standard	2.50 m	24.2 kg	31 - Mystic Grey	White	302804
					Anodised	302814
					Anthracite	302824
4.00 m	standard	2.50 m	26,8 kg	31 - Mystic Grey	White	302806
					Anodised	302816
					Anthracite	302826
4.50 m	standard	2.50 m	27.6 kg	31 - Mystic Grey	White	302808
					Anodised	302818
					Anthracite	302828

Thule Omnistor 5102

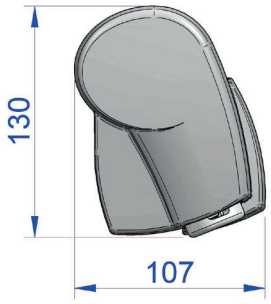

INFO

- Installation — Attached to the existing roof rail (vehicles original T-track)
- Length — 2.60 m
- Projection — 2.00 m
- Cassette — Light Grey
  Anthracite: matching the coulour of bumper & door handles
- Fabric — 31 - Mystic Grey
- Weight — 19.8 kg

FEATURES

- Attached to the existing roof rail using the supplied adapters (only suitable for Volkswagen Multivan)
- Awning with specific adapter for Volkswagen California is only to obtain via Volkswagen dealers
- RHD variant available for right hand driven vehicles
- Ideal form & size to allow public parking's entrance (height: max. 2.00 m)
- Thule Quick-Lock: user-friendly system to help you set up and adjust the support legs to the right heights
- Optional Thule Residence G3 tent to increase living space by 5 m^2
- Only for short wheel base models

ACCESSORIES

- Thule Wall Adapters
- Thule Hold Down Kit
- Thule Hold Down Side Strap Kit
- Thule Gutter
- Thule LED Strip
- Thule Sun Blocker G2 Front
- Thule Sun Blocker G2 Side
- Thule Rain Blocker G2 Front
- Thule Rain Blocker G2 Side
- Thule View Blocker Front
- Thule Windscreen
- Thule Residence G3

MAINTENANCE

- Thule PVC Cleaner
- Thule Repair Patch

THULE OMNISTOR 5102				
LENGTH	PROJECTION	CASSETTE	FABRIC	SKU N°
2.60 m	2.00 m	Anthracite	31 Mystic Grey	303048
		Light grey		303049

Thule 3200

INFO

- Installation: Wall mounting via adapter or onto a roof rack
- Length: 1.90 m - 3.00 m
- Projection: 2.50 m
- Cassette: Anthracite
  Anodised (anthracite bottom + black end caps)
- Fabric: 07 - Uni Grey, a soft touch, water resistant fabric with an innovative design
- Weight: 12 kg - 16.9 kg

FEATURES

- Ideal for direct mount on a selected range of minivans and roof rack installation on cars
- The awning brackets need to be bought seperately
- The awning can be set up by only one person
- Installation: open the cassette and take out the tension arms. Roll out the awning manually and set up the support legs. At last, connect the tension arms with the support legs and create tension
- All awning lengths have a projection of 2.50 m, the largest projection on the market within its category
- Thule Quick-Lock: user-friendly system to help you set up and adjust the support legs to the right heights
- Exceptional stability and fabric tension

ACCESSORIES

- Thule Adapters T 3200
- Thule Hold Down Side Strap Kit
- Thule Sun Blocker G2 Front
- Thule Sun Blocker G2 Side
- Thule Rain Blocker G2 Front
- Thule Rain Blocker G2 Side

MAINTENANCE

- Thule PVC Cleaner
- Thule Repair Patch

THULE 3200						
LENGTH	SUPPORT LEG HEIGHT MAX *	PROJECTION	WEIGHT	CASSETTE	FABRIC	SKU N°
1.90 m	1.93 m (3 parts)	2.50 m	12 kg	Anthracite	07 Uni Grey	303005
2.30 m	2.33 m (3 parts)		13.8 kg	Anthracite		303006
2.50 m			14.7 kg	Anthracite		303007
				Anodised		303002
2.70 m	2.15 m (2 parts)		15.6 kg	Anthracite		303008
				Anodised		303003
3.00 m			16.9 kg	Anthracite		303009
				Anodised		303004

* the height is measured from the ground to the bottom of the lead rail

Thule Omnistor 6300

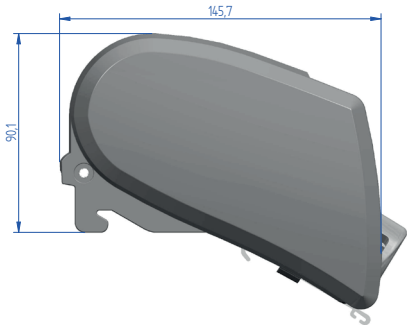

INFO

• Installation	Roof mounting
• Length	2.60 m - 5.00 m
• Projection	2.00 m - 2.50 m
• Cassette	White
	Anodised
	Anthracite: only with fabric 31 (Mystic Grey)
• Fabric	31 - Mystic Grey
	32 - Sapphire Blue
• Weight	20.6 kg - 35.6 kg (without Motor)
	with motor = +1 kg

FEATURES

• Roof-mounted awning suitable for motorhomes, caravans and vans (mid-class)
• Compatible with existing adapter brackets and accessories (need to be ordered separately)
• Installation using the roof top adapter (adhesive) or by means of transverse profiles
• Drilling through the roof is not necessary due to the mechanical fixation in the adapters
• Caravan rail remains free for other accessories: tent
• Perfect fabric tension: sturdy spring arms with patented integrated tension arms ensure a perfectly tensioned awning fabric for increased wind resistance. Standard integrated for awning lengths from 3.75 m and more, optional for awning lengths 3.00 m, 3.25 m and 3.50 m
• Thule Quick-Lock: user-friendly system to help you set up and adjust the support legs to the right heights
• Thule look:
- matches the contemporary RV design
- better integrated on the vehicle roof
• Optional 12V DC motor:
- operate awning lengths from 3.00 m and more without any effort
- control is made with a switch through one touch command
- integrated manual override with hand crank in case of power failure
- can be retrofit installed as an accessory on a manual awning (+ 1 kg and + 3 cm in length)
• Patented roller tube support for better fabric tension and reduced wrinkling of the fabric
• Easy roller tube adjustment: perfect closing of the cassette on the side opposite to the gear
• Improved masking and finish of the technical parts
• Integrated anti-rattling solutions
• Integrated fixation for an optional 3rd support leg to ensure a higher stability (from 3.75 m awning length)
• Increased reliability: built-in durable systems for long life performance create a higher stability which allows awning lengths up to 5.00 m to suit larger vehicles
• Thule Adjustable Pitch system: the incline of the awning fabric can be set as you please to easily open the door of your vehicle without touching the awning fabric
• Ready for accessories: e.g. Thule LED Mounting Rail - Thule Awning Fixation Kit TO 6300/9200

ACCESSORIES

- Thule Roof Adapters
- Thule Motor Kit TO 6300
- Thule Tent LED Mounting Rail TO 6300
- Thule LED Mounting Rail TO 6300/9200
- Thule LED Strip
- Thule Tension Rafter G2
- Thule 3rd Support Leg
- Thule Hold Down Kit
- Thule Hold Down Side Strap Kit
- Thule EPDM Sealing
- Thule Gutter
- Thule Sun Blocker G2 Front
- Thule Sun Blocker G2 Side
- Thule Rain Blocker G2 Front
- Thule Rain Blocker G2 Side
- Thule View Blocker Front
- Thule Windscreen
- Thule Veduta
- Thule Panorama
- Thule Residence G3
- Thule QuickFit
- Thule Awning Fixation Kit TO 6300/9200

MAINTENANCE

- Thule PVC Cleaner
- Thule Repair Patch

THULE OMNISTOR 6300 - MANUAL					
LENGTH	PROJECTION	WEIGHT	CASSETTE	FABRIC	PRODUCT N°
2.60 m	2.00 m	20.6 kg	White	31 Mystic Grey	302100
				32 Sapphire Blue	302101
			Anthracite	31 Mystic Grey	302300
3.00 m	2.50 m	24.1 kg	White	31 Mystic Grey	302120
				32 Sapphire Blue	302121
			Anthracite	31 Mystic Grey	302320
3.25 m	2.50 m	25.1 kg	White	31 Mystic Grey	302130
				32 Sapphire Blue	302131
			Anodised	31 Mystic Grey	302230
				32 Sapphire Blue	302231
			Anthracite	31 Mystic Grey	302330
3.50 m	2.50 m	26.8 kg	White	31 Mystic Grey	302140
				32 Sapphire Blue	302141
			Anodised	31 Mystic Grey	302240
				32 Sapphire Blue	302241
			Anthracite	31 Mystic Grey	302340
3.75 m	2.50 m	28.5 kg	White	31 Mystic Grey	302150
				32 Sapphire Blue	302151
			Anodised	31 Mystic Grey	302250
				32 Sapphire Blue	302251
			Anthracite	31 Mystic Grey	302350
4.00 m	2.50 m	30.5 kg	White	31 Mystic Grey	302160
				32 Sapphire Blue	302161
			Anodised	31 Mystic Grey	302260
				32 Sapphire Blue	302261
			Anthracite	31 Mystic Grey	302360
4.25 m	2.50 m	31.8 kg	White	31 Mystic Grey	302170
				32 Sapphire Blue	302171
			Anthracite	31 Mystic Grey	302370

LENGTH	PROJECTION	WEIGHT	CASSETTE	FABRIC	PRODUCT N°
4.50 m	2.50 m	33 kg	White	31 Mystic Grey	302180
				32 Sapphire Blue	302181
			Anodised	31 Mystic Grey	302280
				32 Sapphire Blue	302281
			Anthracite	31 Mystic Grey	302380
5.00 m	2.50 m	35.6 kg	White	31 Mystic Grey	302190
				32 Sapphire Blue	302191
			Anodised	31 Mystic Grey	302290
				32 Sapphire Blue	302291
			Anthracite	31 Mystic Grey	302390

THULE OMNISTOR 6300 - WITH MOTOR					
LENGTH	PROJECTION	WEIGHT	CASSETTE	FABRIC	PRODUCT N°
3.03 m	2.50 m	25.1 kg	White	31 Mystic Grey	302125
			Anthracite		302325
3.28 m	2.50 m	26.1 kg	White	31 Mystic Grey	302135
			Anodised		302235
			Anthracite		302335
3.53 m	2.50 m	27.8 kg	White	31 Mystic Grey	302145
			Anodised		302245
			Anthracite		302345
3.78 m	2.50 m	29.5 kg	White	31 Mystic Grey	302155
			Anodised		302255
			Anthracite		302355
4.03 m	2.50 m	31.5 kg	White	31 Mystic Grey	302165
			Anodised		302265
			Anthracite		302365
4.28 m	2.50 m	32.8 kg	White	31 Mystic Grey	302175
			Anodised		302375
4.53 m	2.50m	34 kg	White	31 Mystic Grey	302185
			Anodised		302285
			Anthracite		302385
5.03 m	2.50 m	36.6 kg	White	31 Mystic Grey	302195
			Anodised		302295
			Anthracite		302395

THULE OMNISTOR 6300 - AWNING PACKAGE FOR DUCATO | JUMPER | BOXER H2 > 2007 INCL. ADAPTER SET, EPDM SEALING PROFILE AND ADAPTER COVER					
DUCATO	**LENGTH**	**PROJECTION**	**CASSETTE**	**FABRIC**	**PRODUCT N°**
H2L2	3.25 m	2.50	Anodised - black end caps	31 - Mystic Grey	302420
			Anodised - grey end caps		302425
			Anthracite		302430
			White		302439
H2L3	3.75 m	2.50	Anodised - black end caps	31 - Mystic Grey	302421
			Anodised - grey end caps		302426
			Anthracite		302431
			White		302440
H2L4	4.00 m	2.50	Anodised - black end caps	31 - Mystic Grey	302422
			Anodised - grey end caps		302427
			Anthracite		302432
			White		302441

Thule Omnistor 9200

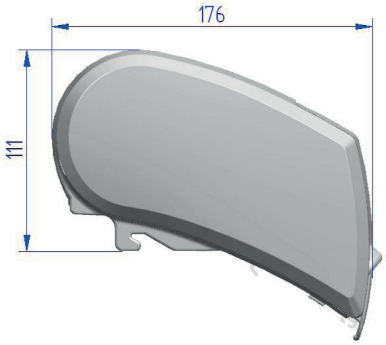

INFO

• Installation	Roof mounting
• Length	4.00 m - 6.00 m
• Projection	3.00 m
• Cassette	White
	Anodised
	Cream: only with fabric 31 - Mystic Grey
• Fabric	31 - Mystic Grey
	32 - Sapphire Blue
	22 - Uni White
• Weight	42.4 kg - 57.6 kg (without motor)
	45.4 kg - 60.6 kg (with motor)

PERFECT FABRIC TENSION

- Improved stability of the complete awning thanks to the integration of automatic tension rafters in both spring arms
- The tension rafters can easily be locked when maximal tension is reached by turning both buttons in the lead rail with 90°
- The perfect tension is achieved by retracting the fabric with the remote control or hand crank
- The new, more powerful motor improves this fabric tension even more when customers want to combine additional Thule accessories

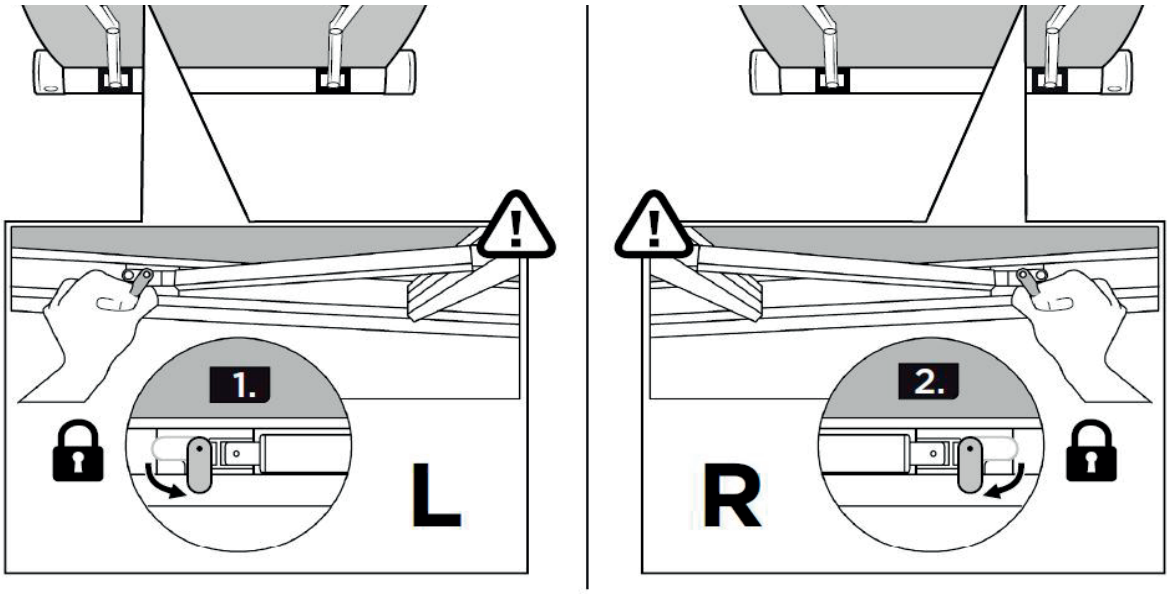

FEATURES

- Roof-mounted awning suitable for caravans and motorhomes (A-class)
- Compatible with existing adapter brackets (need to be ordered separately)
- Installation using the roof top adapter (adhesive) or by means of transverse profiles
- Drilling through the roof is not necessary
- Caravan rail remains free for other accessories: tent
- Largest projection on the market with a superior fabric tension
- Top of the range stability for longer lengths
- Patented roller tube support for better fabric tension and reduced wrinkling of the fabric
- Improved masking and finish of the technical parts

- Integrated anti-rattling solutions
- Increased reliability: built-in durable systems for long life performance
- Thule design: contemporary look, perfect integration on RV's
- Ready for accessories: e.g. Thule LED Mounting Rail - Thule Awning Fixation Kit TO 6300/200/9200
- Spring arms:
  - reinforced with a double steel cable
  - the automatically deployed tension rafters absorb movement to ensure stability and wind-resistance
- Optional 230 VAC EM motor with remote control:
  - operate the awning without any effort
  - electronic system ensures a perfect closing of the front profile
  - mechanical settings prevent the awning fabric being rolled up in the wrong way
  - locking system: prevents the awning from opening while the vehicle is moving, works automatically when closing the awning
  - a safety device enables you to operate the awning manually in case of electricity failure
  - can be retrofit installed as an accessory on a manual Thule Omnistor 9200 awning (+ 2 kg)
  - possibility to operate with optional wall switch
- Thule Quick-Lock: user-friendly system to help you set up and adjust the support legs to the right heights

THULE OMNISTOR 9200 - MANUAL					
LENGTH	PROJECTION	WEIGHT	CASSETTE	FABRIC	SKU N°
4.00 m	3.00 m	42.4 kg	Anodised	31 Mystic Grey	306640
				32 Sapphire Blue	306641
			Cream	31 Mystic Grey	306660
			White	22 Uni White	309856
				31 Mystic Grey	306602
				32 Sapphire Blue	306603
4.50 m	3.00 m	45.6 kg	Anodised	31 Mystic Grey	306642
				32 Sapphire Blue	306643
			Cream	31 Mystic Grey	306662
			White	22 Uni White	309857
				31 Mystic Grey	306606
				32 Sapphire Blue	306607
5.00 m	3.00 m	50.2 kg	Anodised	31 Mystic Grey	306644
				32 Sapphire Blue	306645
			Cream	31 Mystic Grey	306664
			White	22 Uni White	309858
				31 Mystic Grey	306610
				32 Sapphire Blue	306611
5.50 m	3.00 m	53.6 kg	Anodised	31 Mystic Grey	306646
				32 Sapphire Blue	306647
			Cream	31 Mystic Grey	306666
			White	22 Uni White	309859
				31 Mystic Grey	306614
				32 Sapphire Blue	306615
6.00 m	3.00 m	57.6 kg	Anodised	31 Mystic Grey	306648
				32 Sapphire Blue	306649
			Cream	31 Mystic Grey	306668
			White	22 Uni White	309860
				31 Mystic Grey	306618
				32 Sapphire Blue	306619

THULE OMNISTOR 9200 - WITH MOTOR					
LENGTH	PROJECTION	WEIGHT	CASSETTE	FABRIC	SKU N°
4.00 m	3.00 m	45.4 kg	Anodised	31 Mystic Grey	302661
				32 Sapphire Blue	302662
			Cream	31 Mystic Grey	302671
			White	22 Uni White	302680
				31 Mystic Grey	302651
				32 Sapphire Blue	302652
4.50 m	3.00 m	48.6 kg	Anodised	31 Mystic Grey	302663
				32 Sapphire Blue	302664
			Cream	31 Mystic Grey	302673
			White	22 Uni White	302681
				31 Mystic Grey	302653
				32 Sapphire Blue	302654
5.00 m	3.00 m	53.2 kg	Anodised	31 Mystic Grey	302665
				32 Sapphire Blue	302666
			Cream	31 Mystic Grey	302675
			White	22 Uni White	302682
				31 Mystic Grey	302655
				32 Sapphire Blue	302656
5.50 m	3.00 m	56.6 kg	Anodised	31 Mystic Grey	302667
				32 Sapphire Blue	302668
			Cream	31 Mystic Grey	302677
			White	22 Uni White	302683
				31 Mystic Grey	302657
				32 Sapphire Blue	302658
6.00 m	3.00 m	60.6 kg	Anodised	31 Mystic Grey	302669
				32 Sapphire Blue	302670
			Cream	31 Mystic Grey	302679
			White	22 Uni White	302684
				31 Mystic Grey	302659
				32 Sapphire Blue	302660

ACCESSORIES

- Thule Roof Adapters
- Thule Motor Kit TO 9200
- Thule LED Mounting Rail TO 6300/6200/9200
- Thule LED Strip
- Thule Tension Rafter G2
- Thule 3rd Support Leg
- Thule Hold Down Kit
- Thule Hold Down Side Strap Kit
- Thule EPDM Sealing
- Thule Gutter
- Wall switch for TO 8000 EM 230V
- Thule Sun Blocker G2 Front
- Thule Sun Blocker G2 Side
- Thule Rain Blocker G2 Front
- Thule Rain Blocker G2 Side
- Thule View Blocker Front
- Thule Windscreen
- Thule Panorama
- Thule Residence G3
- Thule QuickFit
- Thule Awning Fixation Kit TO 6300/6200/9200

MAINTENANCE

- Thule PVC Cleaner
- Thule Repair Patch

Thule Omnistor 1200

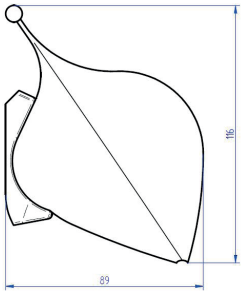

INFO

• Installation	Slides into the caravan rail
• Length	2.30 m - 5.50 m
• Projection	2.00 m - 2.50 m
• Bag	White
• Fabric	31 - Mystic Grey
	32 - Sapphire Blue
• Weight	9 kg - 20 kg

FEATURES

- Exceptional stability for a bag awning
- Largest projection for a bag awning
- Top finish of the bag and technical parts
- The awning is stored in a PVC-sleeve with a sewn rope which simply slides into the caravan rail. Open the sleeve and unroll the awning
- Sturdy roller tube (diam. 62 mm) with integrated support legs and tension arms
- The simultaneous swing-out of the support legs and tension arms enables an easy and fast set-up of the awning
- Exclusive tensioning system with pump-buckle technology for a perfect fabric tension
- Thule Quick-Lock: user-friendly system to help you set up and adjust the support legs to the right heights
- Clever integrated tension arm support kit spreads the load safely on the caravan wall
- A Thule QuickFit tent can easily be installed with the optional Thule Awning Fixation Kit TO 1200 (307063)
- Integrated fixation for an optional 3rd support leg to ensure a highter stability (from 3.50 m awning length)
- Awning lengths from 4.00 m and more have a tension rafter supplied as standard

ACCESSORIES

- Thule Awning Fixation Kit TO 1200
- Thule Tension Rafter G2 TO 1200
- Thule Hold Down Kit
- Thule Hold Down Side Strap Kit
- Thule 3rd Support Leg
- Thule Sun Blocker G2 Front
- Thule Sun Blocker G2 Side
- Thule Rain Blocker G2 Front
- Thule Rain Blocker G2 Side
- Thule View Blocker Front
- Thule Windscreen
- Thule QuickFit

MAINTENANCE

- Thule PVC Cleaner
- Thule Repair Patch

THULE OMNISTOR 1200					
LENGTH	PROJECTION	NET WEIGHT	BAG	FABRIC	SKU N°
2.30 m	2.00 m	9 kg	White	31 Mystic Grey	307256
				32 Sapphire Blue	307255
2.60 m	2.20 m	10.4 kg	White	31 Mystic Grey	307258
				32 Sapphire Blue	307257
3.00 m	2.50 m	12 kg	White	31 Mystic Grey	307260
				32 Sapphire Blue	307259
3.25 m	2.50 m	12.6 kg	White	31 Mystic Grey	307262
				32 Sapphire Blue	307261
3.50 m	2.50 m	13.4 kg	White	31 Mystic Grey	307264
				32 Sapphire Blue	307263
3.75 m	2.50 m	14.2 kg	White	31 Mystic Grey	307266
				32 Sapphire Blue	307265
4.00 m	2.50 m	15 kg	White	31 Mystic Grey	307268
				32 Sapphire Blue	307267
4.25 m	2.50 m	15.8 kg	White	31 Mystic Grey	307270
				32 Sapphire Blue	307269
4.50 m	2.50 m	16.6 kg	White	31 Mystic Grey	307272
				32 Sapphire Blue	307271
5.00 m	2.50 m	18.4 kg	White	31 Mystic Grey	307363
				32 Sapphire Blue	307364
5.50 m	2.50 m	20 kg	White	31 Mystic Grey	307365
				32 Sapphire Blue	307366

Thule Awnings & Adapters - Online Fit Guide for Vans and Compact Vans

Go to www.thule.com

Select "Camping & RV" and choose "Motorized awnings" or "Manual awnings"

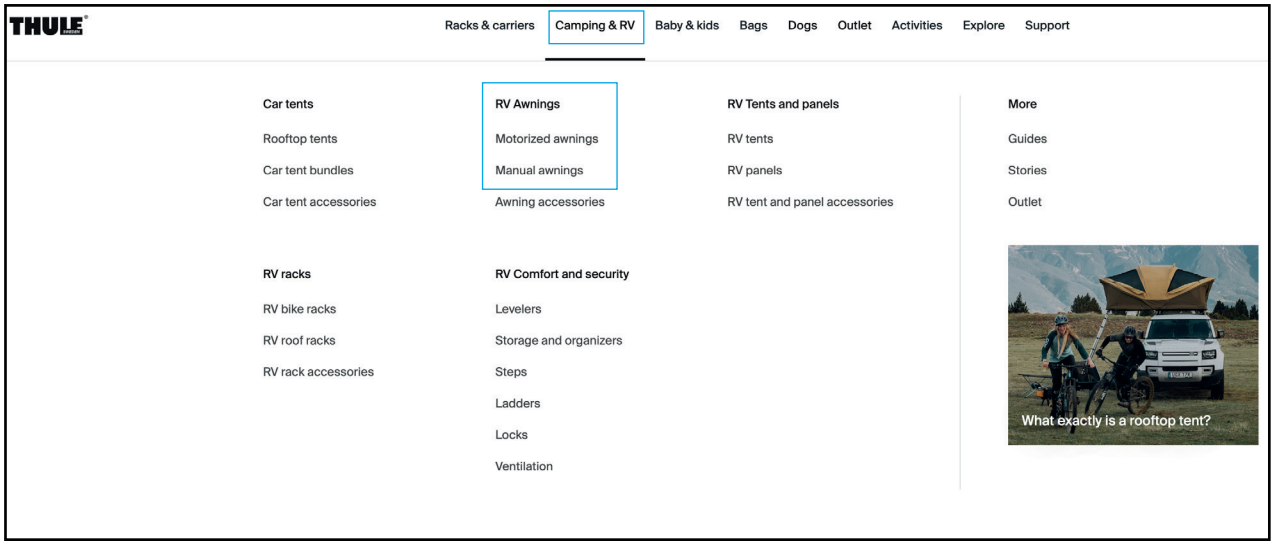

Choose "Select your Vehicle" on the left, enter the vehicle data and discover the compatible Thule RV products

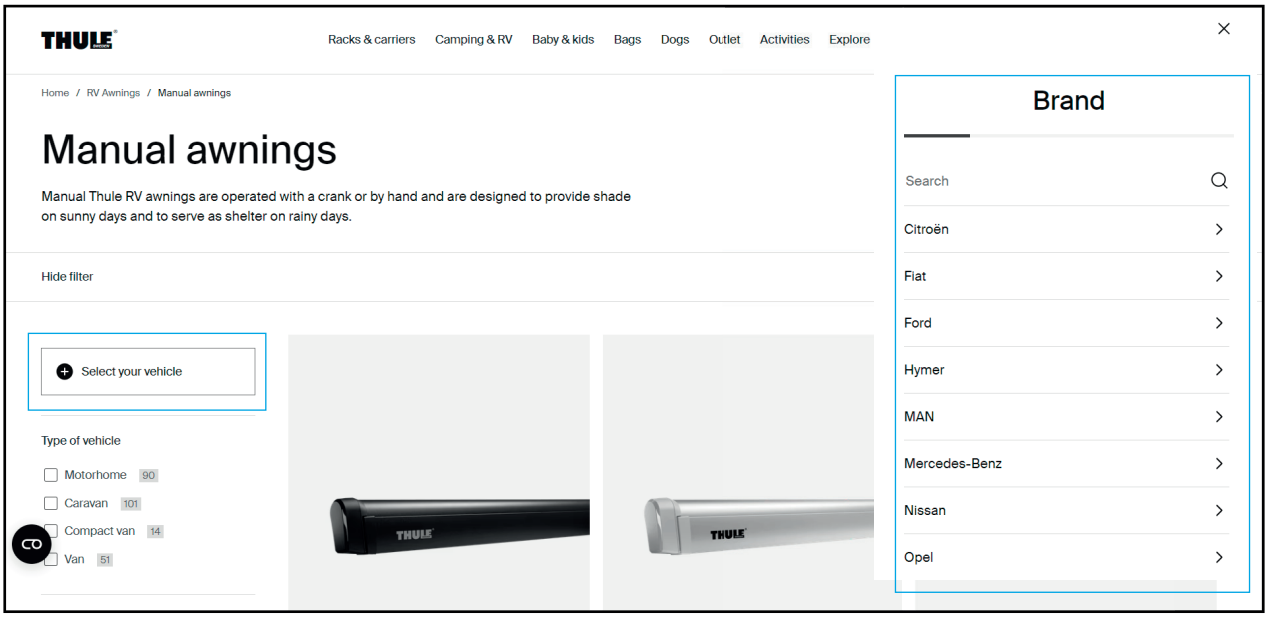

Thule Adapters - Fit Guide

Before installation

- The installation of the adapter must be carried out by a qualified person
- In case you want to install a tent or a panel, make sure that the adapter is well positioned taking the windows, garage and door opening into account
- Check if you have a solid back ground for the installation of the awning adapter
- The adapter must support the awning at the awnings spring arms for a correct and stable mounting. When this is not possible use a full length adapter
- In order to get a watertight installation, use acid free silicone to fill up the drilled holes
- Always read the installation instructions carefully

Select the right adapter

1 **Vehicle type**

❍ Motorhome ❍ Caravan ❍ Van ❍ Compact Van

2 **Vehicle brand**

Model & Year

2 **Select the mounting location and awning type**

❍ Wall mounting

- Most common installation
- Flat adapter mostly included

❍ Roof mounting

- On top of the vehicle: more space under the awning
- Better integrated design
- Alternative in case of lack of space or width restrictions
- Caravan rail remains free

❍ Rail mounting

TO 1200:
- Easy installation without adapter
- Not permanent

3 **Is there an adapter with brand name available (manufacturer adapter)?**
If not: choose from the universal adapter range

4 **Free space:**

On the roof: Only count the straight space between roof curves for the installation of the adapters

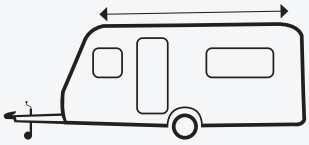

On the wall: Avoid lights and ventilation caps. Make sure the door can open under an opened awning

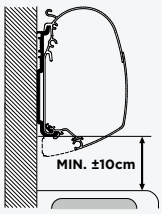

Thule Awning Adapters for UK

Thule Adapters for Wall Mounting - Van

Thule Adapter Wall Ford Transit H3 > 2014 (RHD)

302933

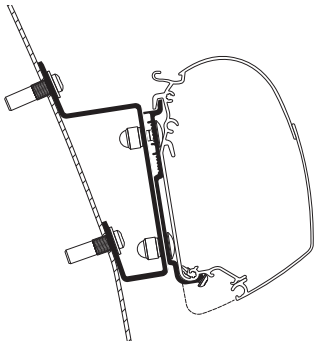

Thule Omnistor 5200

Thule Adapters for Roof Mounting - Van

Thule Adapter Roof VW Crafter 2017 / MAN TGE 2017 (RHD)

301771 Set: 3x 40 cm
NOTE: compatible with L3H3 / L4H3 / L5H3
Not possible to mount on
the pre-installed rails of VW

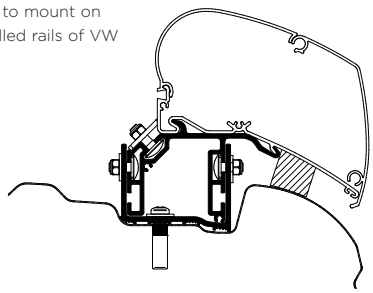

Thule Omnistor 6300

Thule Awning Adapters for UK

Thule Adapters for Wall Mounting - Compact Van

Thule Adapter TO 5102 VW T5/T6 Compact Van Fixed Roof Rail (RHD)

301983
Short wheelbase only

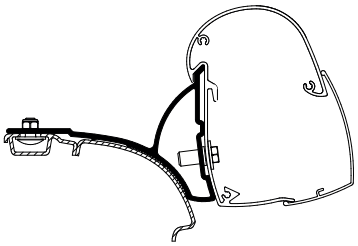

Thule Omnistor 5102

Thule Adapter T 4200 VW T5/T6 Compact Van Fixed (RHD)

301985
Short wheelbase > T 4200 2.60 m
Long wheelbase > T 4200 3.00 m

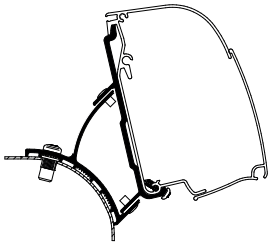

Thule 4200

Thule Adapter T 4200 VW T5/T6 Compact Van Reimo Multi Rail (RHD)

301968 RHD (UK) - Short wheelbase > 2.60 m
301969 RHD (UK) - Long wheelbase > 3.00 m

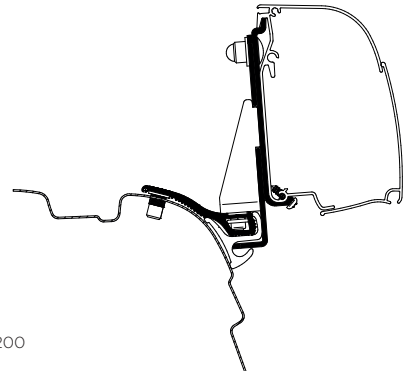

Thule 4200

Thule Adapter T 4200 VW T5/T6 Compact Van Brandrup TOP-Rail G2

301952 Set 2pcs
Short wheelbase > T 4200 2.60 m
Long wheelbase > T 4200 3.00 m

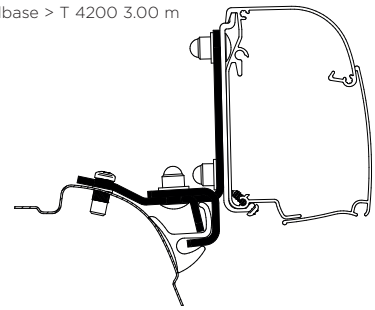

Thule 4200

Thule Adapter T 4200 PSA Compact Van Fixed (RHD)

301991 until end of June 2023
Medium model only > T 4200 2.60 m

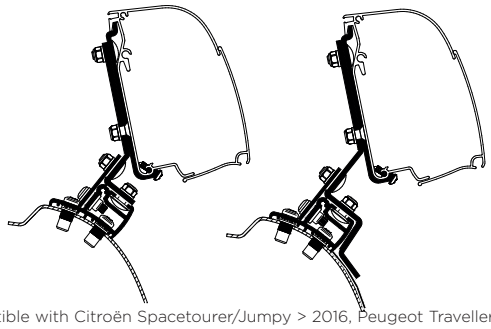

Compatible with Citroën Spacetourer/Jumpy > 2016, Peugeot Traveller/ Expert > 2016, Opel Zafira/Vivaro > 2020, Toyota ProAce > 2016 and Pössl Vanster/Campster, Fiat Scudo >2020
Thule 4200

Thule Adapter T 4200 Ford Transit / Tourneo Custom Minivan Fixed (RHD)

301970 RHD (UK)
Short wheelbase > T 4200 2.60 m
Long wheelbase > T 4200 3.00 m

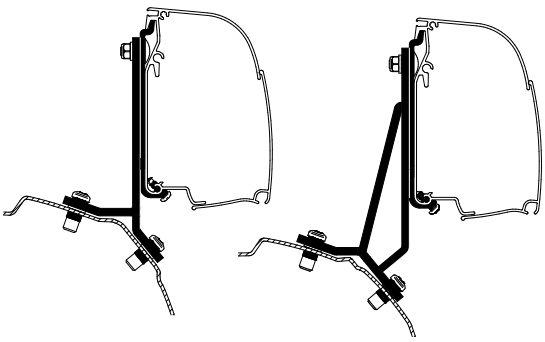

Thule 4200

Thule Awning Adapters for UK

Thule Adapters for Wall Mounting - Compact Van

Thule Adapter Trafic / Vivaro* / Talento / NV300 Minivan Fixed

307996 Set: 2x 50 cm

Short wheelbase > TO 5200 2.30 m
Long wheelbase > TO 5200 / T 4200 2.60 m

*
Renault Trafic > 2001
Opel Vivaro 2015-2019
Fiat Talento > 2015-2020
Nissan NV300 > 2001

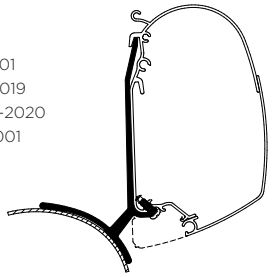

Thule Omnistor: 5200 / 4200

Thule Adapters for Thule 3200

Thule Adapter T 3200 Flat Wall

301924

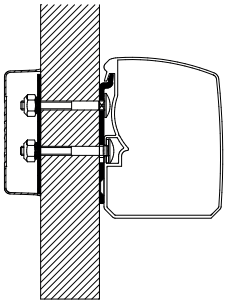

Thule 3200

Thule Adapter T 3200 Roof Rack

301925

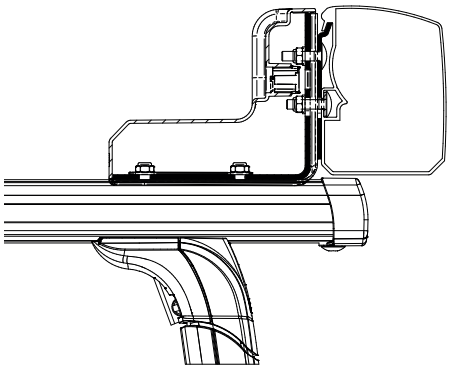

Thule 3200

Thule Awning Adapters for UK

Thule Adapters for Thule 3200

Thule Adapter T 3200 VW T5/T6 Compact Van Fixed (RHD)

301913
Short wheelbase > T 3200 2.70 m
Long wheelbase > T 3200 3.00 m

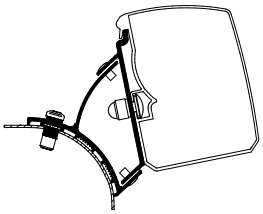

Thule 3200

Thule Adapter T 3200 VW T5/T6 Compact Van Multi Rail

301915 Short wheelbase > T 3200 2.70 m
301934 Long wheelbase > T 3200 3.00 m

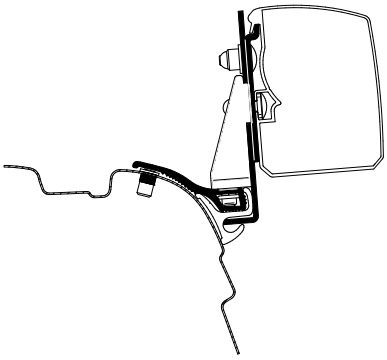

Thule 3200

Thule Adapter T 3200 VW T5/T6 Compact Van Brandrup Rail

301916 Short wheelbase > 2.70 m

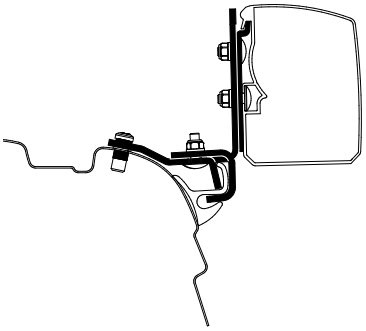

Thule 3200

Thule Adapter T 3200 PSA Compact Van Fixed (RHD)

301919
Medium model only > T 3200 2.70 m

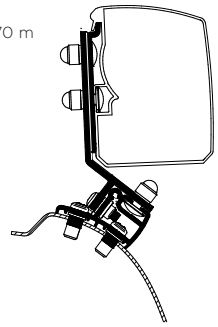

Compatible with Citroën Spacetourer/Jumpy > 2016, Peugeot Traveller/ Expert > 2016, Opel Zafira/Vivaro > 2020, Toyota ProAce > 2016 and Pössl Vanster/Campster, Fiat Scudo >2020
Thule 3200

Thule Adapter T 3200 Ford Transit/ Tourneo Custom Minivan Fixed (RHD)

301921
Short wheelbase > T 3200 2.70 m
Long wheelbase > T 3200 3.00 m

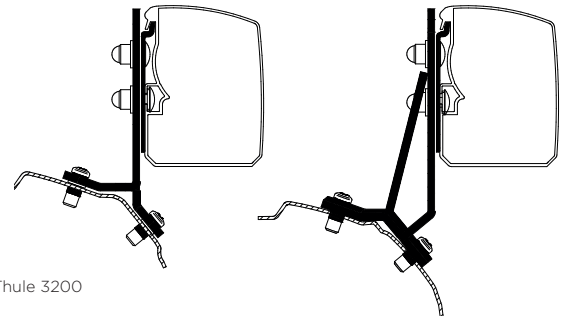

Thule 3200

Thule Adapter T 3200 Trafic / Vivaro / Talento / NV300 Compact Van Fixed

301922
Short wheelbase > T 3200 2.30 m
Long wheelbase > T 3200 2.50 m

*
Renault Trafic > 2001
Opel Vivaro 2015-2019
Fiat Talento > 2015-2020
Nissan NV300 > 2001

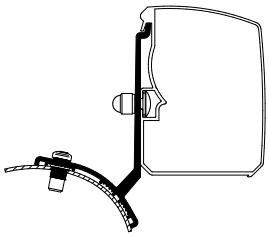

Thule 3200

Thule Awning Adapters for Wall Mounting

Thule Adapters for Wall Mounting - Universal

Thule Adapter TO 1200 Caravan Rail Luxe

307922 6.00 m: 10 pcs

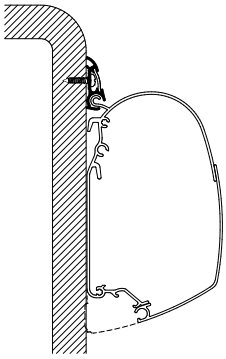

Thule Omnistor: 5200 / 8000 / 1200

Thule Adapter TO 1200 Caravan Rail

307899 3.00 m: 20 pcs
307908 6.00 m: 20 pcs

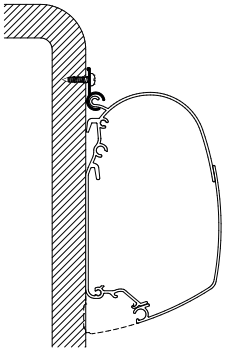

Thule Omnistor: 5200 / 8000 / 1200

Thule Adapter Wall Flat

307915 40 cm: 5 pcs
307909 75 cm: 5 pcs
308040 3.00 m
308041 3.50 m
308042 4.00 m
308043 4.50 m
308044 5.00 m
308046 6.00 m

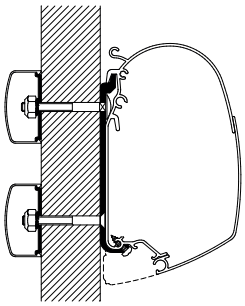

Thule Omnistor: 5200 / 8000 / 4200

Thule Adapter Wall Universal Wall

302926 Set: 2x 8 cm + 1x 4 cm

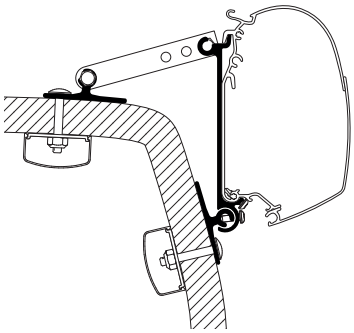

Thule Omnistor: 5200 / 4200

Thule Adapter Wall Universal Roof

302927 Set: 3x 8 cm

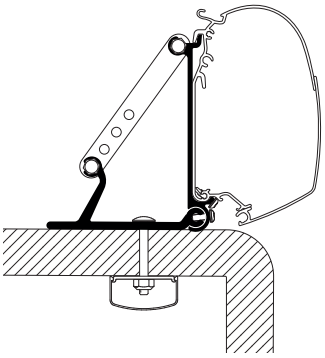

Thule Omnistor: 5200 / 4200

Thule Awning Adapters for Wall Mounting

Thule Adapters for Wall Mounting - Manufacturer

Thule Adapter Wall Bailey Motorhome

301981 Set: 5x 15 cm

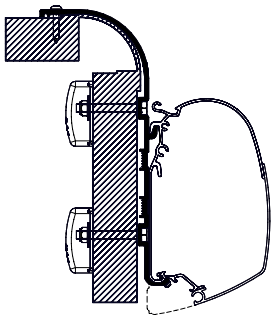

Thule Omnistor 5200 on all Bailey motorhomes
Thule 4200 on all Bailey caravans

Thule Adapter Wall Bürstner 2017

301680 Set: 2x 40 cm + 2x 8 cm

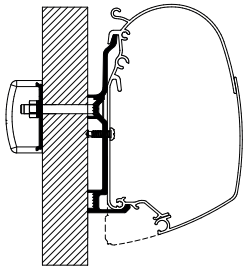

Thule Omnistor 5200

Thule Adapter Wall Bürstner

308025 Set: 2x 35 cm + 1x 8 cm
308027 3.00 m
308028 3.50 m
308029 4.00 m
308030 4.50 m
308031 5.00 m
308032 5.50 m

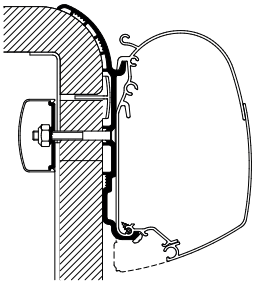

Thule Omnistor: 5200 / 8000 / 4200

Thule Adapter Wall Bürstner Ixeo

309978 Model T680 - 4.00 m
309979 Model T728/734 - 4.50 m
+ Dethleffs 4-Travel

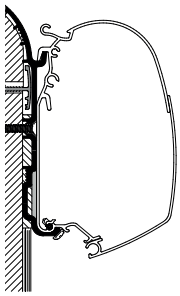

Thule Omnistor: 5200 / 8000 / 4200

Thule Adapter Wall Carado | Sunlight

309983 Set: 1x 17.5 cm + 1x 4 cm + 1x 40 cm

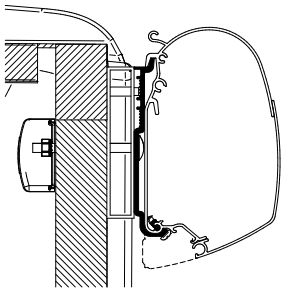

Thule Omnistor: 5200 / 8000 / 4200

Thule Adapter Wall Dethleffs Globebus

308002 3.00 m
308003 3.50 m
308934 TO 5200 > 4.00 m
Set: 2x 4 cm + 2x 17.5 cm
308004 TO 8000 > 4.00 m - 6.00 m
Set: 2x 8 cm + 2x 40 cm

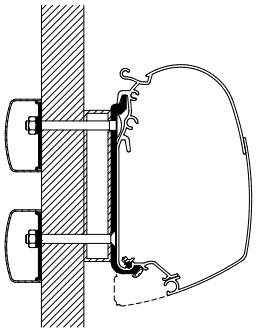

Thule Omnistor: 5200 / 8000 / 4200

Thule Awning Adapters for Wall Mounting

Thule Adapters for Wall Mounting - Manufacturer

Thule Adapter Wall Eriba Touring

307882 Set: 3x 4 cm

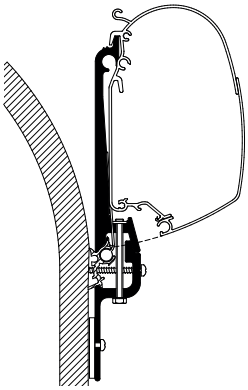

Thule Omnistor: 5200 / 4200

Thule Adapter Wall Eden | Allegro < 2010

307919	Set: 1x 70 cm + 1x 30 cm + 1x 8 cm
308022	3.50 m
308023	4.00 m

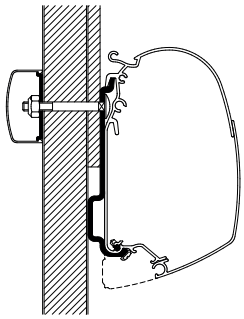

Thule Omnistor: 5200 / 8000 / 4200

Thule Adapter Wall Eden | Allegro | Trigano > 2010

308764 Set: 3x 50 cm

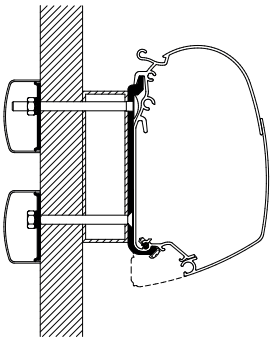

Thule Omnistor: 5200 / 8000 / 4200

Thule Adapter Wall Frankia

301927	3.50m
301928	4.00m
301929	4.50m
301930	5.00m
301931	5.50m
301932	6.00m

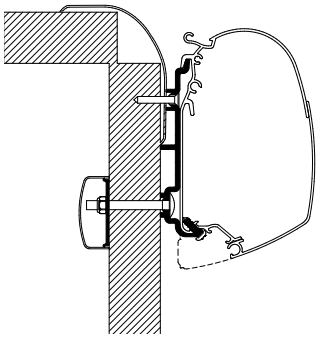

Thule Omnistor: 5200 / 8000

Thule Adapter Wall Hobby Optima Ontour 2019

301905 Set: 2x 8 cm + 2x 40cm

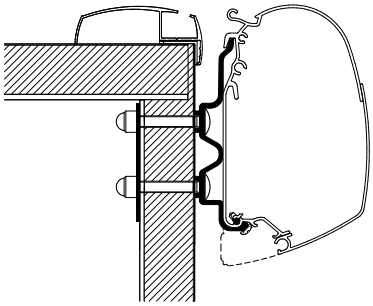

Thule Omnistor 5200 (3.50 m - 4.00 m)

Thule Adapter TO 5102 Hymer Car 302 - Ducato H1

308659 Set: 2x 12 cm

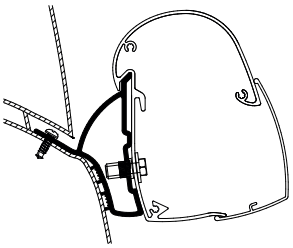

Thule Omnistor 5102

Thule Awning Adapters for Wall Mounting

Thule Adapters for Wall Mounting - Manufacturer

Thule Adapter Wall Hymer 2016

309985	2.60 m
309986	3.00 m
309987	3.50 m
309988	4.00 m
309989	4.50 m
309990	5.00 m
309991	5.50 m
309992	6.00 m

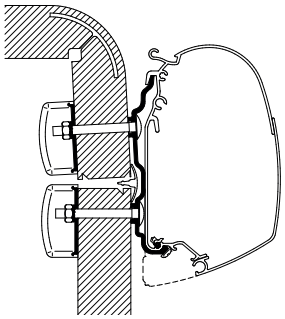

Thule Omnistor: 5200 / 8000 / 4200

Thule Adapter Wall Hymercamp ≤ 2011

307933	3.00 m
307944	3.50 m
307957	4.00 m
307965	4.50 m
307971	5.00 m
307976	5.50 m
308686	6.00 m

+ Rapido

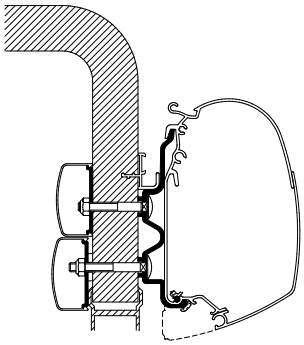

Thule Omnistor: 5200 / 8000 / 4200

Thule Adapter Wall Hymer B2

307932	3.00 m
307943	3.50 m
307956	4.00 m
307964	4.50 m
307970	5.00 m
307975	5.50 m
307978	6.00 m

+ Eriba Motorhome 2009

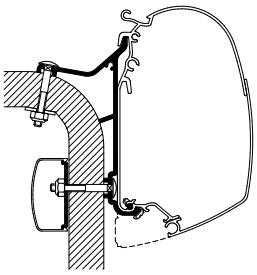

Thule Omnistor: 5200 / 8000 / 4200

Thule Adapter Wall Knaus 2017

301681 Set: 2x 17.5 cm + 2x 4 cm

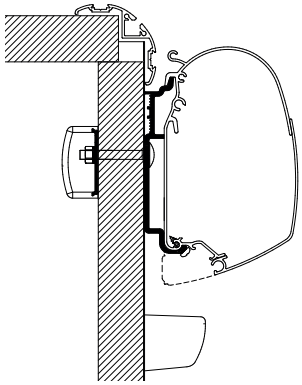

Thule Omnistor 5200

Thule Adapter Wall Knaus Deseo 2019

301900 3.50 m

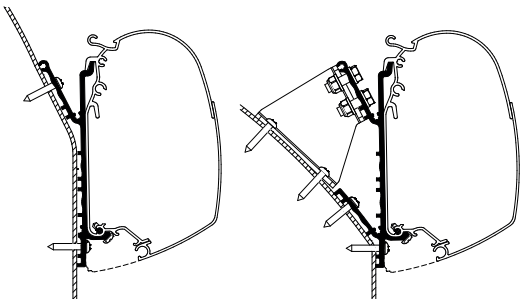

Thule Omnistor 5200

Thule Adapter Wall Knaus Tourer CUV

302934 3.00 m

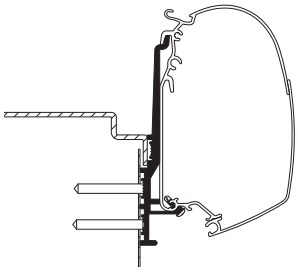

Thule Omnistor: 5200

Thule Awning Adapters for Wall Mounting

Thule Adapters for Wall Mounting - Manufacturer

Thule Adapter Wall Laika X

308297 Set: 3x 17.5 cm

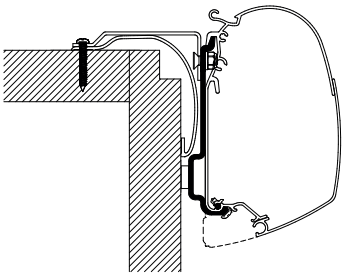

Thule Omnistor: 5200 / 4200

Thule Adapter Wall Pilote Explorateur

308006 Set: 2x 8 cm + 2x 40 cm
308014 4.00 m

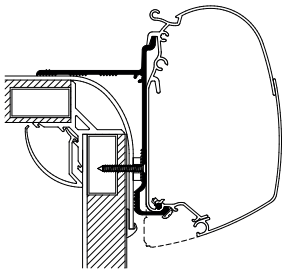

Thule Omnistor: 5200 / 8000 / 4200

Thule Adapter Wall Rapido Serie 6

302941 3.50 m
302938 4.00 m
302939 4.50 m

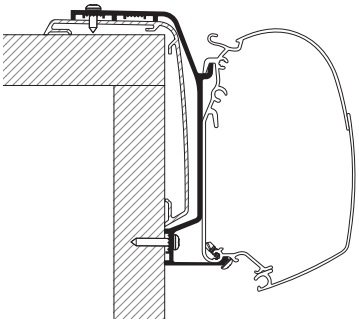

Thule Omnistor: 5200 / 4200

Thule Adapter Wall Rapido Serie 7/8/9

307923 Set: 2x 18 cm + 1x 1 m (Serie 7/8)
307931 3.00 m (Serie 7/8/9)
307942 3.50 m (Serie 7/8/9)
307955 4.00 m (Serie 7/8/9)
308854 5.00 m (Serie 7/8/9)
307911 Set: 2x 18 cm + 2x 8 cm (Serie 9)

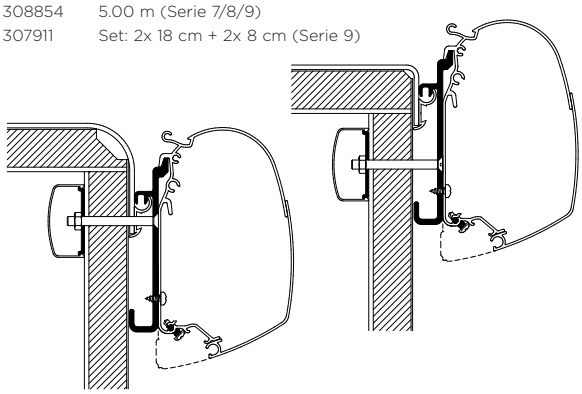

Thule Omnistor: 5200 / 8000 / 4200

Thule Awning Adapters for Wall Mounting

Thule Adapters for Wall Mounting - Van

Thule Adapter Wall Ducato | Jumper | Boxer ≤ 2006

302928 Set: 3x 8 cm

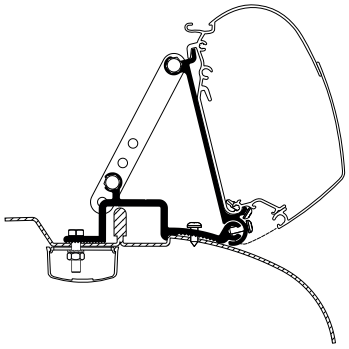

Thule Omnistor: 5200 / 4200

Thule Adapter Wall Ducato | Iveco H2 Lift Roof

308960 Set: 3x 17.5 cm

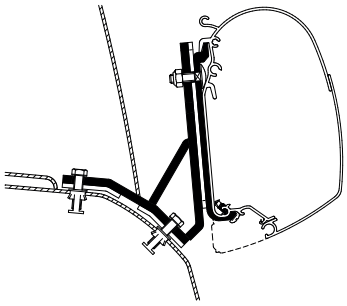

Thule Omnistor: 5200 / 4200

Thule Adapter Wall Ducato H2 Lift Roof LED

301950 3.15m
301951 3.75m
301940 4.00m

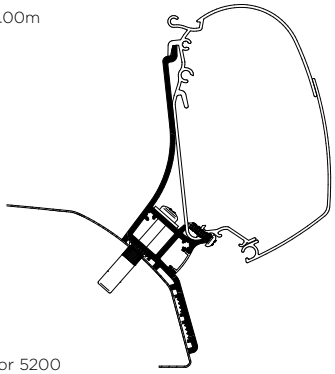

Thule Omnistor 5200

Thule Adapter Wall Ducato H3 + EPDM

309999 Set: 2x 50 cm + 1x 10 cm

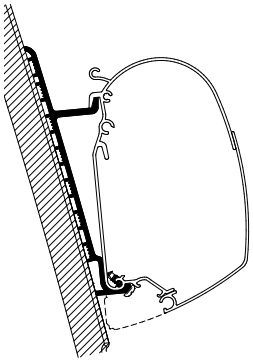

Thule Omnistor: 5200 / 4200

Thule Adapter Wall Ford Transit High Roof

307999 Set: 2x 40 cm

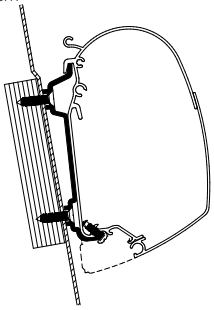

Thule Omnistor: 5200 / 8000 / 4200

Thule Adapter Wall Ford Transit H3 > 2014 (LHD)

302916

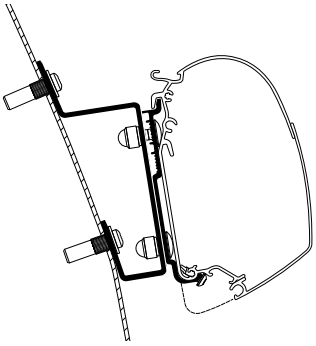

Thule Omnistor 5200

Thule Awning Adapters for Wall Mounting

Thule Adapters for Wall Mounting - Van

Thule Adapter Wall Renault Master 1998-2010

302929 Set: 3x 8 cm

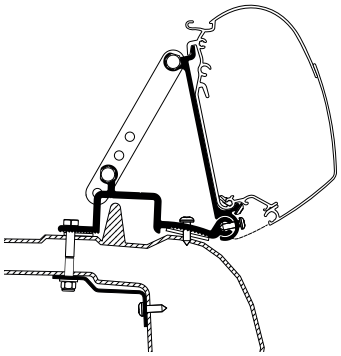

Thule Omnistor: 5200 / 8000 / 4200

Thule Adapter Wall Renault Master High Roof H3

308072 Set: 2x 50 cm

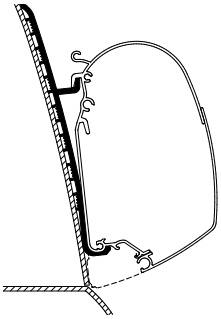

Thule Omnistor: 5200 / 8000 / 4200

Thule Awning Adapters for Wall Mounting

Thule Adapters for Wall Mounting - Compact Van

Thule Adapter T 4200 VW T4 Lift Roof

307887 Set: 2x 8 cm

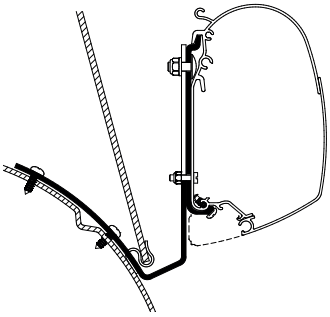

Thule 4200

Thule Adapter T 4200 Van

307884 Set: 1x 4 cm + 2x 8 cm

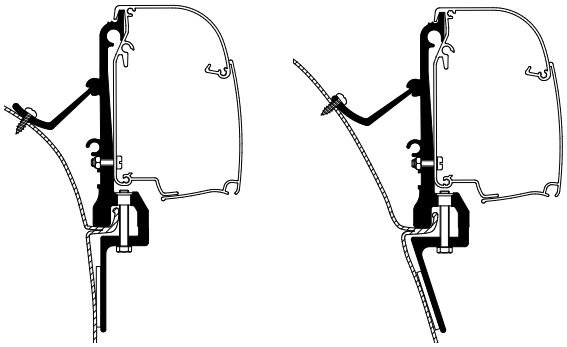

Thule 4200

Thule Adapter T 4200 Westfalia

308426 Set: 3x 8 cm

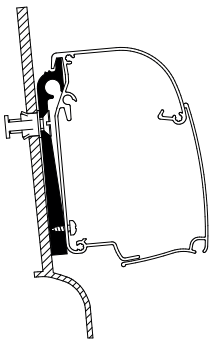

Thule 4200

Thule Adapter T 4200 Westfalia Nugget for High Roof

309984 Set: 2x 12 cm

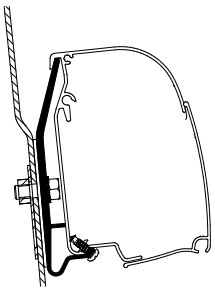

Thule 4200 (2.60 m)

Thule Adapter TO 5102 Hymer Car 302 / Ducato H1

308659 Set: 2x 12 cm

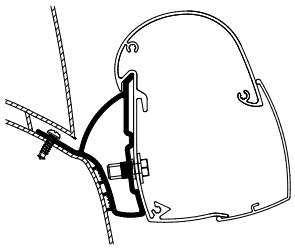

Thule Omnistor 5102

Thule Adapter TO 5102 VW T5/T6 Compact Van Fixed Roof Rail (LHD)

301982

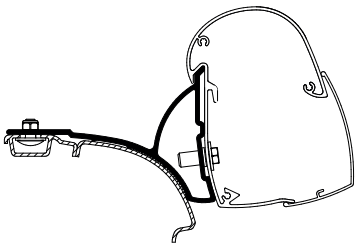

Thule Omnistor 5102

Thule Awning Adapters for Wall Mounting

Thule Adapters for Wall Mounting - Compact Van

Thule Adapter T 4200 VW T5/T6 Compact Van Fixed (LHD)

301984
Short wheelbase > 2.60 m
Long wheelbase > 3.00 m

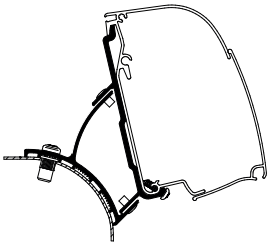

Thule 4200

Thule Adapter T 4200 VW T5/T6 Compact Van Reimo Multi Rail (LHD)

301986 Short wheelbase > 2.60 m
301988 Long wheelbase > 3.00 m

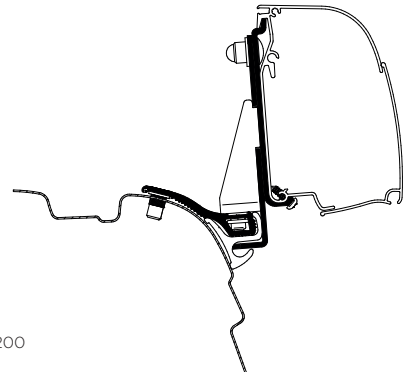

Thule 4200

Thule Adapter T 4200 VW T5/T6 Compact Van Brandrup Rail

307886 Set: 2x 8 cm

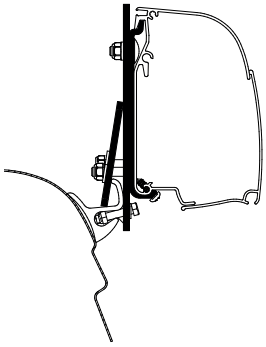

Thule 4200

Thule Adapter T 4200 VW T5/T6 Compact Van Brandrup TOP-Rail

301952 Set 2pcs
Short wheelbase > T 4200 2.60 m
Long wheelbase > T 4200 3.00 m

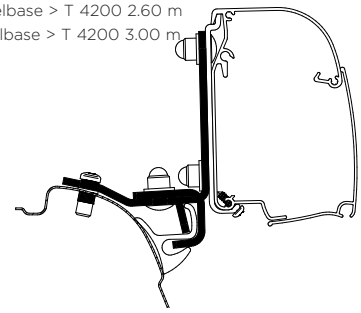

Thule 4200

Thule Adapter T 4200 PSA Compact Van Fixed (LHD)

301990 until end of June 2023
Medium model only > T 4200 2.60 m

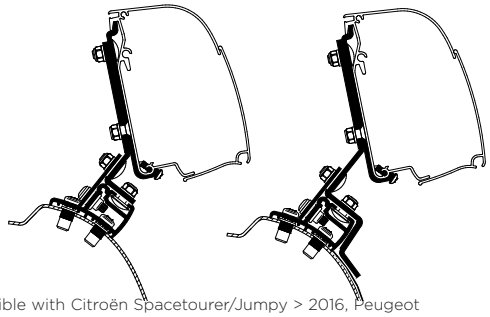

Compatible with Citroën Spacetourer/Jumpy > 2016, Peugeot Traveller/Expert > 2016, Opel Zafira/Vivaro > 2020, Toyota ProAce > 2016, Pössl Vanster/Campster, Fiat Scudo >2020
Thule 4200

Thule Adapter T 4200 Ford Transit / Tourneo Custom Compact Van Fixed (LHD)

301992
Short wheelbase > T 4200 2.60 m
Long wheelbase > T 4200 3.00 m

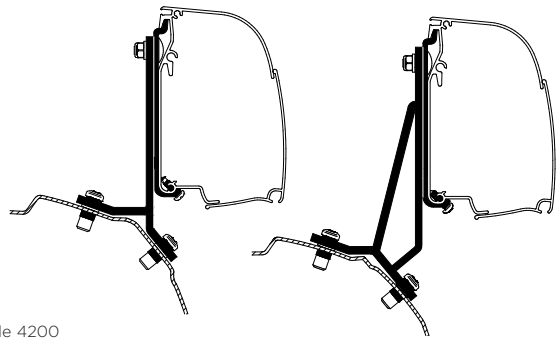

Thule 4200

Thule Awning Adapters for Wall Mounting

Thule Adapters for Wall Mounting - Compact Van

Thule Adapter Trafic / Vivaro* / Talento / NV300 Minivan Fixed

307996 Set: 2x 50 cm
Short wheelbase > TO 5200 2.30 m
Long wheelbase > T 4200 / TO 5200 2.60 m

*
Renault Trafic > 2001
Opel Vivaro 2015-2019
Fiat Talento > 2015
Nissan NV300 > 2001

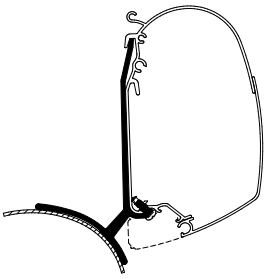

Thule Omnistor: 5200 / 4200

Adapter T 4200 Westfalia Kepler One/Five/six

301980 2.60 m or 3.00 m

Short wheelbase > 2.60 m (Five)
Long wheelbase > 3.00 m (One / Six)

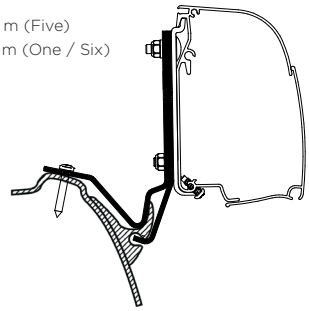

Thule 4200

Thule Adapter T 4200 Mercedes Benz Vito / V-Class Lift Roof - no rail

301978 2.60 m

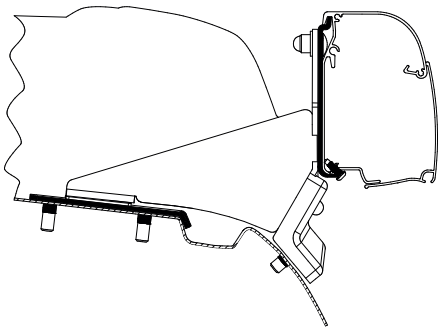

Cannot be installed when a rain/tent rail is mounted to the vehicle
Thule 4200

Thule Awning Adapters for T 3200

Thule Adapters for T 3200

Thule Adapter T 3200 VW T2/T3

302930 set: 2x 8cm + 1x4cm

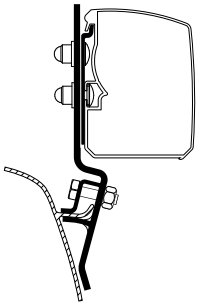

Thule 3200

Thule Adapter T 3200 VW T4

302931 set: 2x 8cm

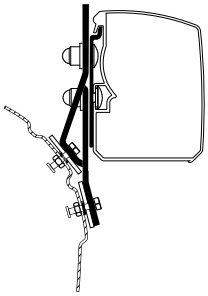

Thule 3200

Thule Adapter T 3200 Flat Wall

301924

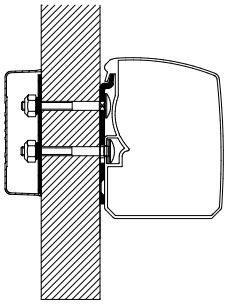

Thule 3200

Thule Adapter T 3200 Roof Rack

301925

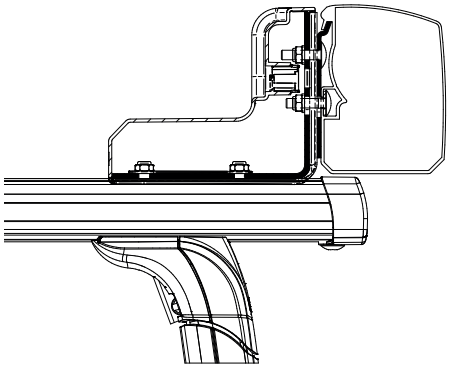

Thule 3200

Thule Adapter T 3200 VW T5/T6 Compact Van Fixed (LHD)

301912
Short wheelbase > T 3200 2.70 m
Long wheelbase > T 3200 3.00 m

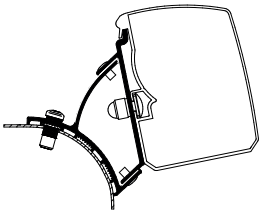

Thule 3200

Thule Adapter T 3200 VW T5/T6 Compact Van Multi Rail (LHD)

301914 Short wheelbase > T 3200 2.70 m
301933 Long wheelbase > T 3200 3.00 m

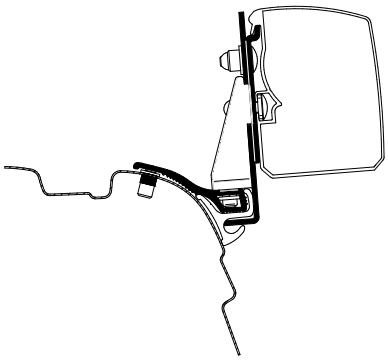

Thule 3200

Thule Awning Adapters for T 3200

COMPACT VAN + THULE 3200

Thule Adapter T 3200 VW T5/T6 Compact Van Brandrup Rail

301916 Short wheelbase > 2.70 m

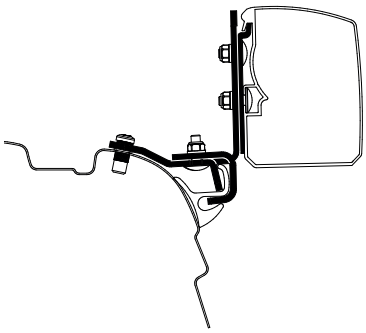

Thule 3200

Thule Adapter T 3200 PSA Compact Van Fixed (LHD)

301918
Medium model only > T 3200 2.70 m

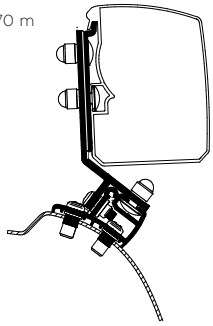

Compatible with Citroën Spacetourer/Jumpy > 2016, Peugeot Traveller/Expert > 2016, Opel Zafira/Vivaro > 2020, Toyota ProAce > 2016, Pössl Vanster/Campster, Fiat Scudo >2020
Thule 3200

Thule Adapter T 3200 Ford Transit / Tourneo Custom Compact Van Fixed (LHD)

301920
2.60 m or 3.00 m
Short wheelbase > T 3200 2.60 m (Five)
Long wheelbase > T 3200 3.00 m (One / Six)

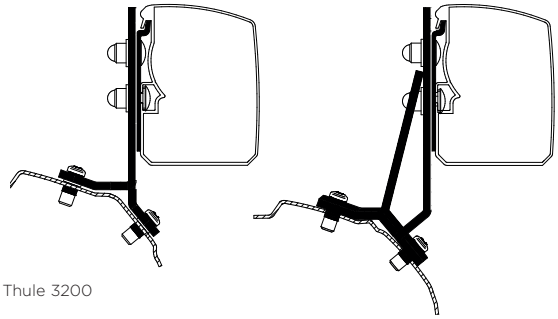

Thule 3200

Thule Adapter T 3200 Trafic / Vivaro / Talento/NV300* Compact Van Fixed

301922
Short wheelbase > T 3200 2.70 m
Long wheelbase > T 3200 3.00 m

*
Renault Trafic > 2001
Opel Vivaro 2015-2019
Fiat Talento > 2015
Nissan NV300 > 2001

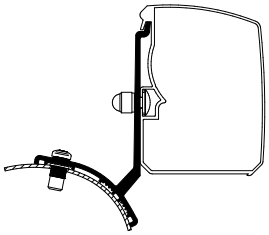

Thule 3200

Thule Adapter T 3200 Westfalia Kepler One/Five/six

301979
Short wheelbase > T 3200 2.70 m (Five)
Long wheelbase > T 3200 3.00 m (One / Six)

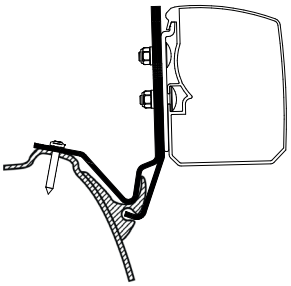

Thule 3200

Thule Awning Adapters for Roof Mounting

Thule Adapters for Roof Mounting - Universal

Thule Adapter Roof Flat

308097	3.00 m
308098	3.50 m
308099	4.00 m
308100	5.50 m
306799	6.00 m

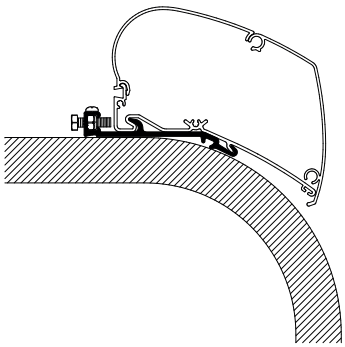

Thule Omnistor: 9200 / 6300

Thule Adapter Roof Mounting Rails

308054	Set: 2x mounting rails + Adapter
308055	Set: 3x mounting rails + Adapter

Awnings	≤ 3.50 m: 1x 308054
Awnings	3.75 m - 4.50 m: 1x 308055
Awnings	≥ 5.00 m: 2x 308054

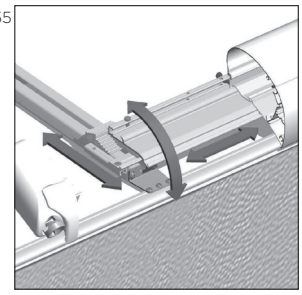

Thule Omnistor: 9200 / 6300

Thule Adapter Roof Top

308299 Set: 2x 27 cm + 2x 50 cm

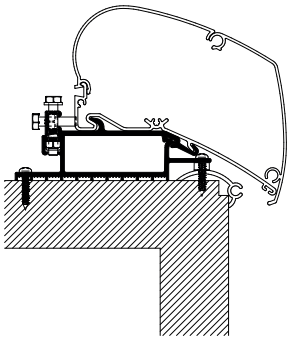

Thule Omnistor: 9200 / 6300

Thule Awning Adapters for Roof Mounting

Thule Adapters for Roof Mounting - Manufacturer Motorhome

Thule Adapter Roof Auto-Sleepers ≥ 2013

306794 3.00 m
306795 3.50 m
306796 4.00 m
306797 5.00 m

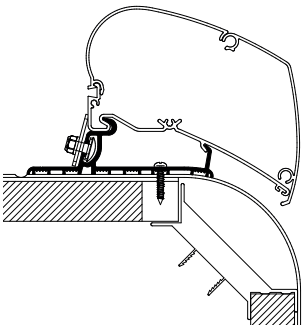

Thule Omnistor: 9200 / 6300

Thule Adapter Roof Carthago Chic < 2014

309892 3.50 m
309888 4.00 m
309889 4.50 m
309890 5.00 m
309891 5.50 m

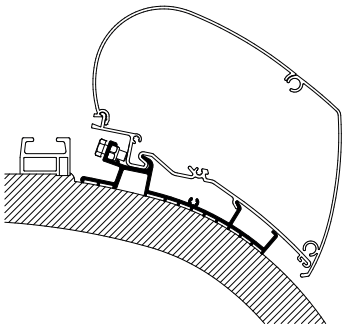

Thule Omnistor: 9200 / 6300

Thule Adapter Roof Carthago C-Line > 2014

307250 3.50 m
307251 4.00 m
307252 4.50 m
307253 5.00 m
307254 5.50 m
301439 6.00 m

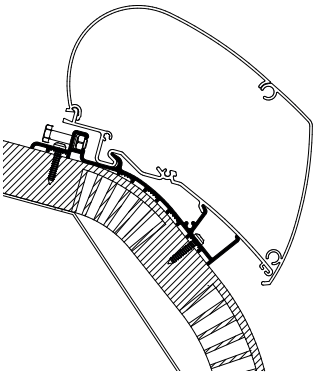

Thule Omnistor: 9200 / 6300

Thule Adapter Roof Carthago Malibu / Fendt > 2022

308078 3.50 m
308079 4.00 m
301417 4.50 m *
301418 5.00 m

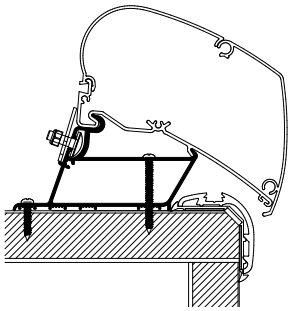

* Also suitable for Fendt Diamant caravan models > 2020
Thule Omnistor: 9200 / 6300

Thule Adapter Roof Hobby Optima Deluxe / Premium LED

301902 Set: 2x 27 cm + 2x 50 cm

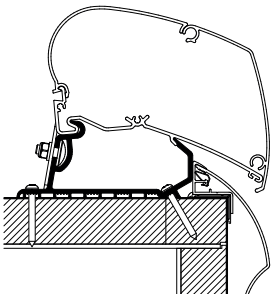

Thule Omnistor: 9200 / 6300

Thule Adapter Roof Hymer SX

308087 3.50 m
308088 4.00 m
308089 4.50 m
308090 5.00 m
308091 5.50 m
306800 6.00 m

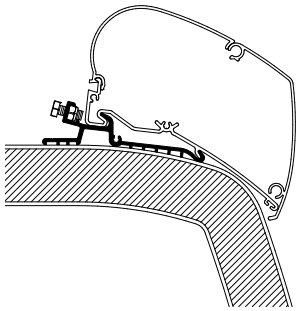

Thule Omnistor: 9200 / 6300

Thule Awning Adapters for Roof Mounting

Thule Adapters for Roof Mounting - Manufacturer Motorhome

Thule Adapter Roof Hymer 2013

306951 3.50 m
306952 4.00 m
306953 4.50 m
306954 5.00 m
306955 5.50 m
306956 6.00 m

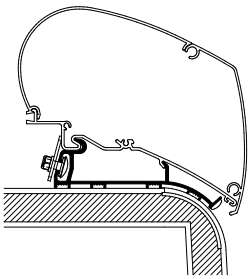

Thule Omnistor: 9200 / 6300

Thule Adapter Roof Laika Ecovip

301998 set: 2x 50cm + 2x 27cm

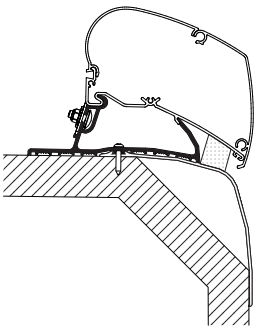

Thule Omnistor: 9200 / 6300

Thule Adapter Roof Laika Kreos

301999 set: 2x 50cm + 2x27 cm

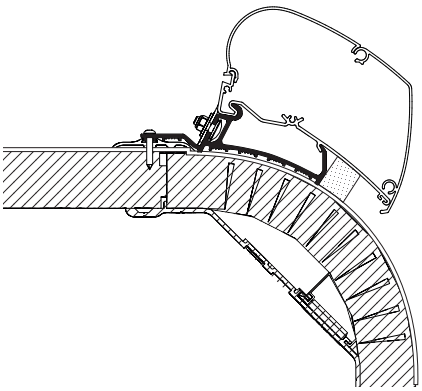

Thule Omnistor: 9200 / 6300

Thule Adapter Roof LMC Liberty TI/TEC

307042 3.00 m
307043 3.50 m
307044 3.75 m
307045 4.00 m
307046 4.50 m
307049 5.00 m
307047 5.50 m
307048 6.00 m
+ Bürstner Aviano 2016

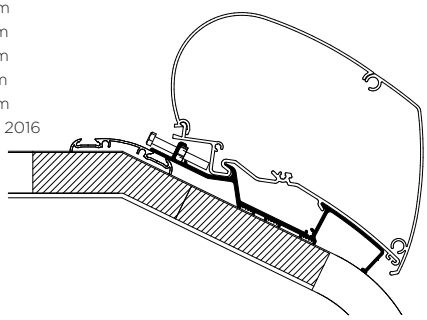

Thule Omnistor: 9200 / 6300

Thule Adapter Roof LMC Explorer / Cruiser MJ2018

301473 3.50 m
301474 4.00 m
301475 4.50 m
301480 5.00 m
301476 5.50 m

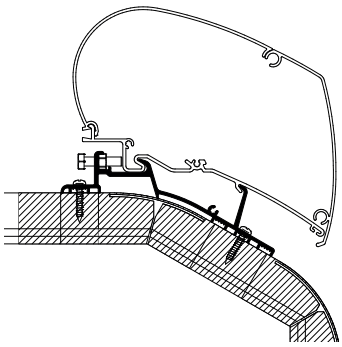

Thule Omnistor: 9200 / 6300

Thule Adapter Roof Niesmann+Bischoff Smove

301423 Model 6.9B/Q - 3.00 m
301424 Model 7.4B/E - 3.50 m

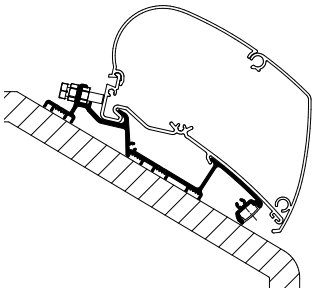

Thule Omnistor: 6300

Thule Awning Adapters for Roof Mounting

Thule Adapters for Roof Mounting - Manufacturer Motorhome

Thule Adapter Roof Rapido Distinction

309944 4.50 m
301764 5.00 m
301765 6.00 m

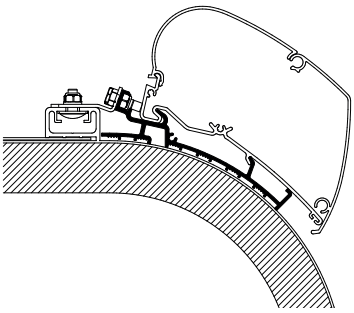

Thule Omnistor: 9200 / 6300

Thule Adapter Roof Rapido Serie Compact

301965 3.50 m
301966 4.00 m
301967 4.50 m

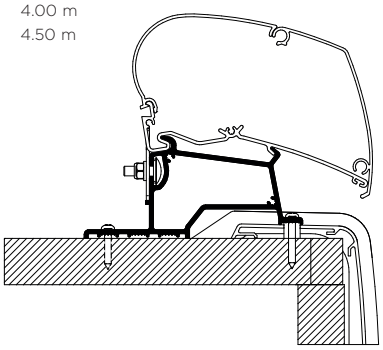

Thule Omnistor: 6300

Thule Adapter Roof Rapido Serie Compact Integral

302932 5.00 m

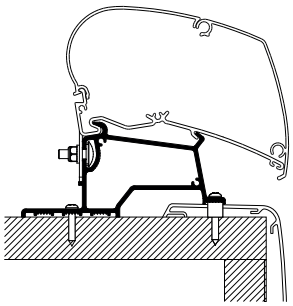

Thule Omnistor: 6300

Thule Adapter Roof Swift Escape 2017

301412 Model 604/695 - 3.00 m
301413 Model 622/614/664/685 - 3.50 m
301414 Model 674/684/694 - 4.25 m

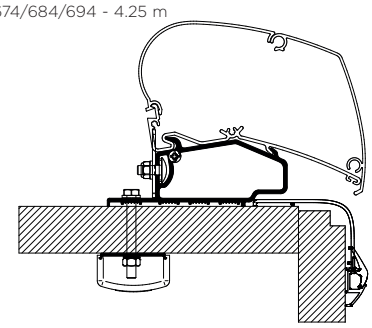

Thule Omnistor: 9200 / 6300

Thule Awning Adapters for Roof Mounting

Thule Adapters for Roof Mounting - Manufacturer Caravan

Thule Adapter Roof Adria Caravan ≥ 2015

309982 Set: 2x 50 cm + 2x 27 cm

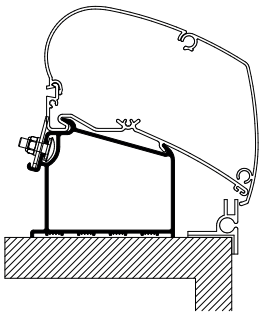

Thule Omnistor: 9200 / 6300

Thule Adapter Roof Caravan

306757	Set: 3x 1.00 m
309957	3.00 m
309962	3.25 m
309958	3.50 m
309963	3.75 m
306807	4.00 m
309964	4.25 m
306809	4.50 m
307132	5.00 m
307133	5.50 m
309959	6.00 m

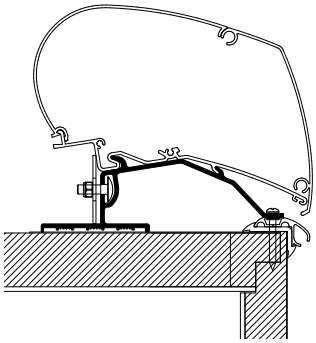

Fits Thule Omnistor Awnings on different vehicle brands:
Fendt, Dethleffs, LMC*, Trigano: 9200 / 6300
*Extra fixation: LMC Caravan Kit 307064

Thule Adapter Roof Top Caravan LED

301945	4.25 m
301946	4.50 m
301947	5.00 m
301948	5.50 m
301949	6.00 m

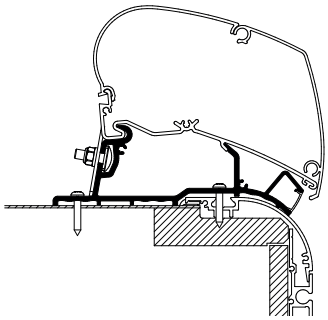

Thule Omnistor: 9200 / 6300

Thule Adapter Roof Eriba Touring 820

301682 5.00 m

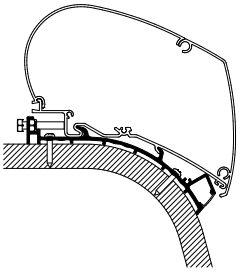

Thule Omnistor: 9200 / 6300

Thule Adapter Roof Fendt Brillant < 2021

309692 Set: 2x 11.5 cm + 1x 27 cm + 1x 50 cm (< 4.50 m)

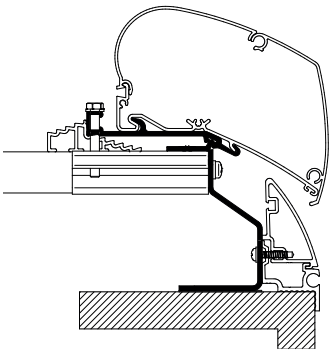

Thule Omnistor: 9200 / 6300

Thule Adapter Roof Hobby Caravan 2009

308663 Set: 2x 27 cm + 2x 50 cm

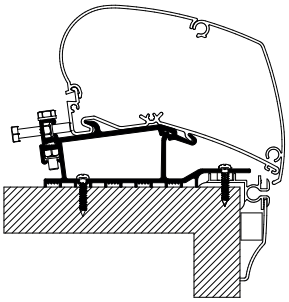

Thule Omnistor: 9200 / 6300

Thule Awning Adapters for Roof Mounting

Thule Adapters for Roof Mounting - Manufacturer Caravan

Thule Adapter Roof Hobby Premium/ Ontour

309819 Set: 2x 27 cm + 2x 50 cm

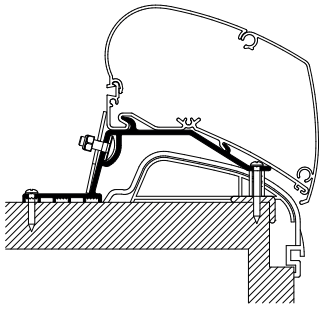

Thule Omnistor: 9200 / 6300

Thule Adapter Roof Hobby Caravan 2014-2023

306948 Set: 2x 60 cm + 2x 27 cm

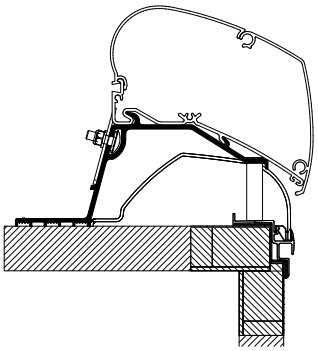

Thule Omnistor: 9200 / 6300

Thule Adapter Roof Hobby Caravan 2024

302935 Set: 2x 60 cm + 2x 27 cm

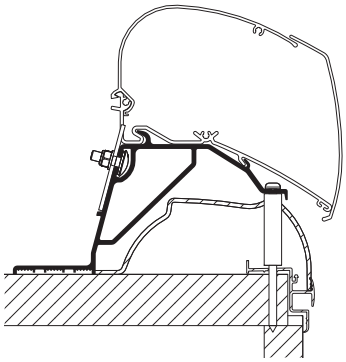

Thule Omnistor: 6300

Thule Adapter Roof Hymer 2013 Nova

306951	3.50 m
306952	4.00 m
306953	4.50 m
306954	5.00 m
306955	5.50 m
306956	6.00 m

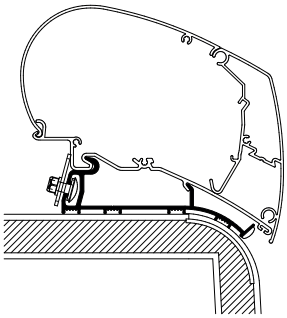

Thule Omnistor: 9200 / 6300

Thule Adapter Roof Kit LMC Caravan

307064

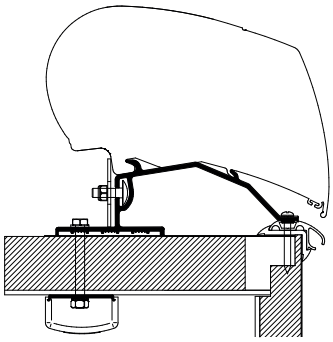

Note: in combination with Caravan Roof Adapter
Thule Omnistor: 9200 / 6300

Thule Awning Adapters for Roof Mounting

Thule Adapters for Roof Mounting - Van

Thule Adapter Roof Ducato | Jumper | Boxer 1994-2006

Adapter + EPDM
308058

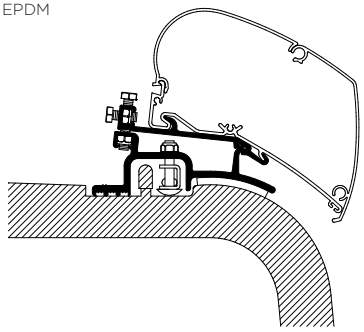

Thule Omnistor 6300

Thule Adapter Roof Ducato | Jumper | Boxer > 2007

Adapter + EPDM + adapter covers
301649 Set: 2x 27 cm + 1x 10 cm (L2H2 3.25 m)
301650 Set: 2x 27 cm + 2x 10 cm (L3H2 3.75 m | L4H2 4.00 m)

Also for Pössl skyroof

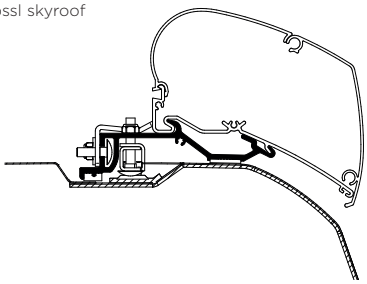

Thule Omnistor 6300

Thule Adapter Roof Mercedes Sprinter > 2007 | VW Crafter 2007-2016

308073

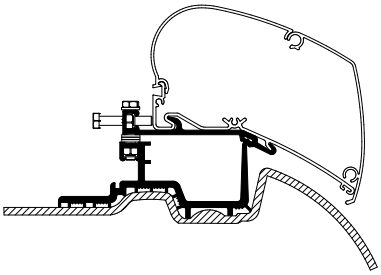

Thule Omnistor 6300

Thule Adapter Roof Mercedes Sprinter > 2007 | VW Crafter 2007-2016 (OE Track)

301668

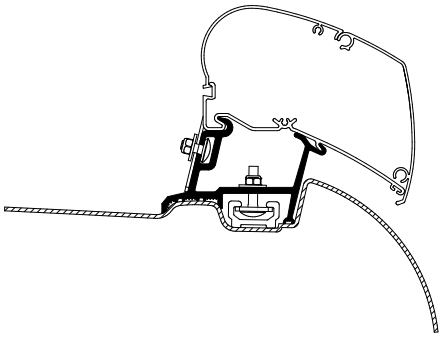

Thule Omnistor 6300

Thule Adapter Roof VW Crafter 2017 | MAN TGE 2017 (LHD)

301768 Set: 3x 40 cm - LHD (EU)
Adapter + EPDM + adapter covers

NOTE: compatible with L3H3 / L4H3 / L5H3
Not possible to mount on
the pre-installed rails of VW

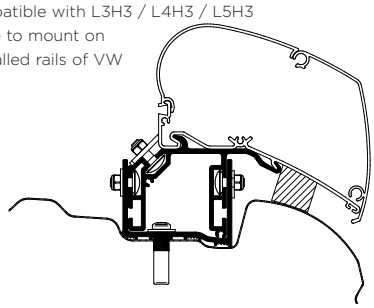

Thule Omnistor 6300

Thule Adapter Roof Renault Master | Opel Movano 1998-2010

308059

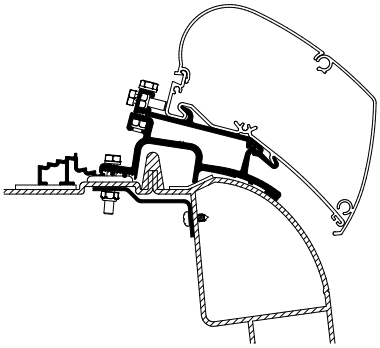

Thule Omnistor 6300

Thule Awning Adapters for Roof Mounting

Thule Adapters for Roof Mounting - Van

Thule Adapter Roof Renault Master | Opel Movano < 2022

302923 Set: 3x 17.5 cm

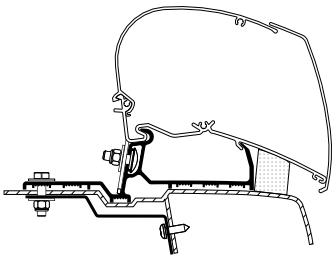

Thule Omnistor 6300

Thule Awning Adapters for Ducato / Jumper / Boxer

Fiat Ducato - Peugeot Boxer - Citroën Jumper

	C **L1** (4963 mm)	M **L2** (5413 mm)	L **L3** (5998 mm)	XL **L4** (6363 mm)
H1 (2254 mm)	 wall awning 2.60 m - 308659 *			
H2 (2524 mm)	 wall awning 2.60 m (Lift Roof) - 308960	 - roof awning 3.25 m - 301649 - wall awning 3.15 m (Lift Roof) - 301950 (TO 5200) - for pre-installed smart clamp system - 301651	 - roof awning 3.75 m - 301650 - wall awning 3.75 m (Lift Roof) - 301951 (TO 5200) - for pre-installed smart clamp system - 301652	 - roof awning 4.00 m - 301650 - wall awning 4.00 m (Lift Roof) - 301940 (TO 5200) - for pre-installed smart clamp system - 301652
H3 (2764 mm)			 wall awning 3.50 m - 309999	 wall awning 4.00 m - 309999
	wheel base 3000 awning length 2.60 m	wheel base 3450 awning length 3.15 m - 3.25 m	wheel base 4035 awning length 3.75 m	wheel base 4035 XL awning length 4.00 m

* Fits only with awning TO 5102

Thule Awning Adapters for Ford Transit

Ford Transit >2015

	M **L2** (5531 mm)	L **L3** (5981 mm)	XL **L4** (6704 mm)
H2 (2426-2542 mm)			
H3 (2665-2790 mm)	 wall awning 3m00 + 302916	 wall awning 3m50 + 302916	 wall awning 4m00 + 302916

Thule Awning Adapters for Sprinter / Crafter < 2017

Mercedes Sprinter > 2007 - VW Crafter 2007-2016

	C L1 (5245 mm)	M L2 (5910 mm)	L L3 (6945 mm)	XL L4 (7345 mm)
H1 (2435-2530 mm)				
H2 (2720-2820 mm)		 - roof awning 3.25 m - 308073 - in case of OE Track - 301668	 - roof awning 4.25 m - 308073 - in case of OE Track - 301668	 - roof awning 4.50 m - 308073 - in case of OE Track - 301668
H3 (3045-3055 mm)				
	wheel base 3250	wheel base 3665	wheel base 4325	wheel base 4325 XL

Note: Adapter 308073 is not compatible with VW Crafter models as from 2017

Thule Awning Adapters for VW Crafter 2017 / MAN TGE 2017

VW Crafter 2017 / MAN TGE 2017

		M **L3** (5986 mm)	L **L4** (6836 mm)	XL **L5** (7391 mm)
H2 (2355 mm)				
H3 (2590 mm)		 roof awning 3.25 m 301768 (LHD) - 301771 (RHD)	 roof awning 4.00 m 301768 (LHD) - 301771 (RHD)	 roof awning 4.50 m 301768 (LHD) - 301771 (RHD)
H4 (2798 mm)				
		wheel base 3640	wheel base 4490	wheel base 4490

Thule Awning Adapters for Master Movano

Renault Master - Opel Movano

	C **L1** (5048 mm)	M **L2** (5548 mm)	L **L3** (6198 mm)	XL **L4** (6848 mm)
H1 (2307 mm)				
H2 (2500-2549 mm)		 roof awning 3.25 m - 302923	 roof awning 3.75 m - 302923	 roof awning 4.00 m - 302923
H3 (2744-2815 mm)		 wall awning 3.00 m - 308072	 wall awning 3.50 m - 308072	 wall awning 4.00 m - 308072
	wheel base 3182	wheel base 3682	wheel base 4332	wheel base 4332 XL

Awning Accessories

LIGHTING	
Thule LED Strip	64
Thule LED Strip Sideways	65
Thule LED Mounting Rail TO 6300/6200/9200	66
Thule Tent LED Mounting Rail TO 6300/6200	68
Thule Tent LED Mounting Rail TO 5200	69

WIND PROTECTION	
Thule Tension Rafter G2	70
Thule Tension Arm Set TO 5200 V2	71
Thule Tension Arm Set TO 6300	71
Thule Fabric Clamps	72
Thule 3rd Support Leg	72
Thule Hold Down Kit	73
Thule Hold Down Side Strap Kit	73

MOTORISATION	
Thule Motor Kit TO 5200	74
Thule Motor Kit TO 6300	75
Thule Motor Kit 230V EM TO 8000/9200	76

SEALINGS	
Thule Sealing Rubber	77
Thule Gutter	77
Thule EPDM Sealing	78

MAINTENANCE	
Thule PVC Cleaner	78
Thule Repair Patch	79

Thule LED Strip

INFO

- Flexible white LED strip, delivered with high quality 3M tape on the back
- Working voltage 12 VDC
- Power consumption 340-380 mA per meter
- 60 power LEDs per meter
- 1 meter connection cable included
- Warm white light with light starkness up to 300 Lumen
- Suitable for outdoor usage: waterproof IP65
- Can be shortened each 5 cm (possible to solder cables on cutting points)
- Can be taped on most standard even materials and surfaces
- Can also be used inside the vehicle to create more light
- Long lifetime

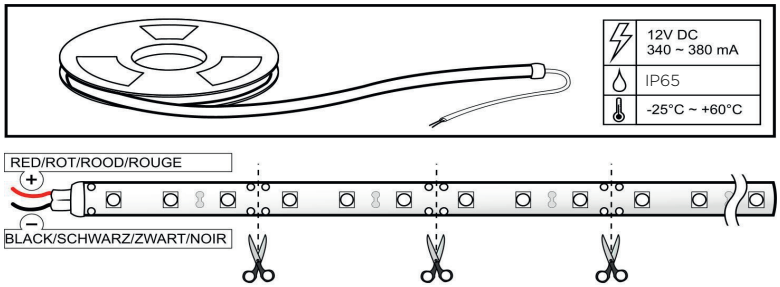

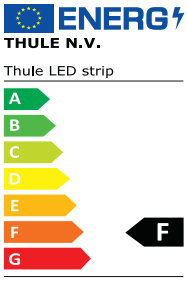

307135	Thule LED Strip - 4.00 m	20 kWh/1000h
307136	Thule LED Strip - 5.00 m	25 kWh/1000h
307137	Thule LED Strip - 6.00 m	30 kWh/1000h

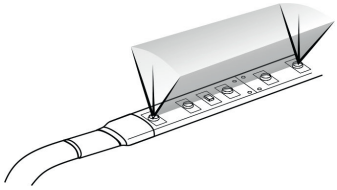

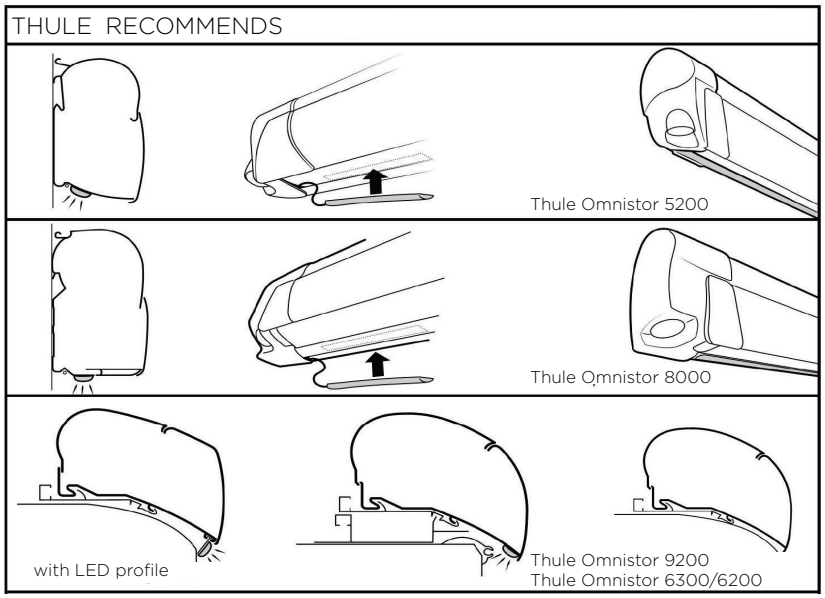

Thule LED Strip Sideways

INFO

- Flexible black LED strip, delivered with high quality 3M tape on the back
- Working voltage 12 VDC
- Power consumption 340-380 mA per meter
- 60 power LEDs per meter
- 1 meter connection cable included:
  NOTE: In combination with Thule Tent LED Mounting Rail TO 6300/6200 (301664) is the connection cable on the right side
- Warm white light with light starkness up to 300 Lumen
- Suitable for outdoor usage: waterproof IP65
- Can be shortened each 5 cm (possible to solder cables on cutting points)
- Can be taped on most standard even materials and surfaces
- Can also be used inside the vehicle to create more light
- Long lifetime
- Width: 8 mm
- Length: 4.00 m
- Colour: anthracite

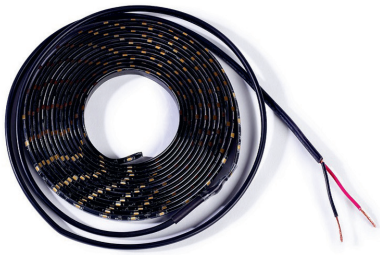

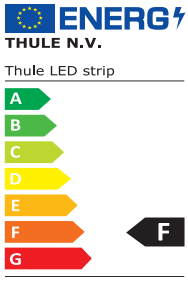

301660	Thule LED Strip Sideways - 4.00 m	20 kWh/10000h

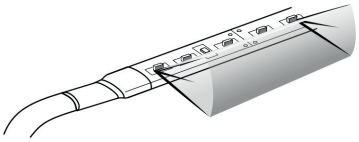

RELATED PRODUCT

- Thule Tent LED Mounting Rail TO 6300/6200 - 301664

Thule LED Mounting Rail TO 6300/6200/9200

INFO

- For the installation of a LED strip on roof awnings Thule Omnistor 6300 | 6200 | 9200
- An aluminum profile fits the opening in the bottom of the awning cassette
- The LED light can be used both when the awning is opened or closed
- Cannot be used with the Thule Awning Fixation Kit TO 6300/6200/9200 (307050)
- Content:
  - 6x 1.00 m (packed in a black cardboard tube)

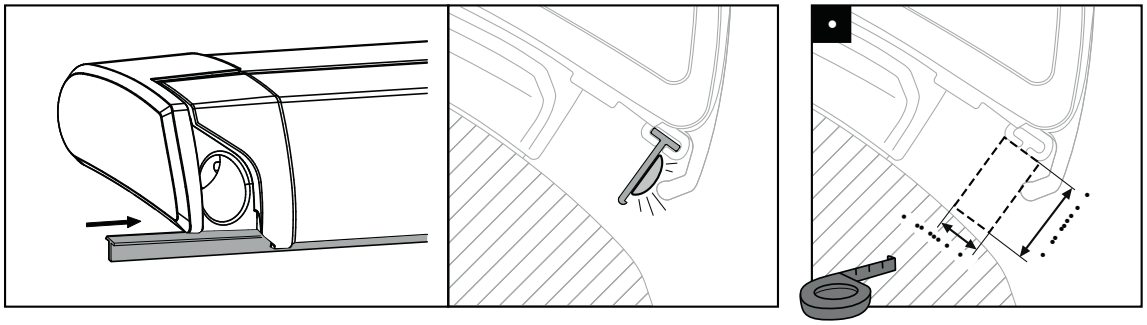

THULE LED STRIP IN COMBINATION WITH THULE OMNISTOR ADAPTERS FOR ROOF MOUNTING

		Thule LED Mounting Rail possible	LED strip can be glued on bracket	LED strip can be glued on wall
Thule Omnistor Adapters for roof mounting - Universal				
308xxx	Flat Roof - 3.00m - 6.00m	DRS*		•
308054	Installation profiles: 2x mounting rails + adapter			•
308055	Installation profiles: 3x mounting rails + adapter			•
308299	Roof Top	DRS*		•
Thule Omnistor Adapters for roof mounting - Manufacturer				
309892	Carthago Chic < 2014 - 3.50m	•	•	
309888	Carthago Chic < 2014 - 4.00m	•	•	
309889	Carthago Chic < 2014 - 4.50m	•	•	
309890	Carthago Chic < 2014 - 5.00m	•	•	
309891	Carthago Chic < 2014 - 5.50m	•	•	
307250	Carthago C-Line > 2014 - 3.50m	•	•	
307251	Carthago C-Line > 2014 - 4.00m	•	•	
307252	Carthago C-Line > 2014 - 4.50m	•	•	
307253	Carthago C-Line > 2014 - 5.00m	•	•	
307254	Carthago C-Line > 2014 - 5.50m	•	•	
301439	Carthago C-Line > 2014 - 6.00m	•	•	
308110	Esterel - 4.00m	•		
308107	Giottiline (set: 2x10 cm + 2x 40cm)	•		

* DRS = Depending on roof shape

		Thule LED Mounting Rail possible	LED strip cab be glued on bracket	LED strip can be glued on wall
Thule Omnistor Adapters for roof mounting - Motorhome				
301902	Hobby Optima Deluxe / Premium Led	•		
3080xx	Hymer SX - 3.50m - 6.00m			•
30695x	Hymer 2013 - 3.50m - 6.00m	•	•	
30704x	LMC Liberty TI / TEC - 3.00m - 6.00m		•	
301473	LMC Explorer - Cruiser MJ2018 - 3.50m	•		
301474	LMC Explorer - Cruiser MJ2018 - 4.00m	•		
301475	LMC Explorer - Cruiser MJ2018 - 4.50m	•		
301480	LMC Explorer - Cruiser MJ2018 - 5.00m	•		
301476	LMC Explorer - Cruiser MJ2018 - 5.50m	•		
308078	Carthago Malibu - 3.50m	•		
308079	Carthago Malibu - 4.00m	•		
301417	Carthago Malibu - 4.50m	•		
301418	Carthago Malibu - 5.00m	•		
301423	Niesmann Smove Model 6.9B/Q - 3.00m	•	•	
301424	Niesmann Smove Model 7.4B/E - 3.50m	•	•	
309945	Rapido Distinction - 4.00m	•	•	
309944	Rapido Distinction - 4.50m	•	•	
30679x	Autosleepers - 3.00m - 5.00m	•		
30141x	Swift Escape 2017 3.00m - 4.25m	•		

Thule Omnistor Adapters for roof mounting - Caravan				
309982	Adria Caravan > 2015 (set: 2x 50cm + 2x 27cm)			•
306757	Caravan Roof Adapter (set: 3x 1m)	•		
30xxxx	Caravan Roof Adapter 3.00m - 6.00m	•		
30194x	Caravan Roof Top Adapter LED 4.25m - 6.00m		•	
301682	Eriba Touring 820 - 5.00m		•	
309692	Fendt Brillant (set 2x 11,5cm + 1x 27cm + 1x 50cm)	•		
308663	Hobby Caravan 2009 (set: 2x 27cm + 2x 50cm)			•
309819	Hobby Premium & Ontour (set: 2x 27cm + 2x 50cm)			•
306948	Hobby Caravan > 2014			•
30695x	Hymer 2013 Nova Roof	•	•	

Thule Omnistor Adapters for roof mounting - Van				
308058	Ducato | Jumper | Boxer 1994-2006	•		
301649	Ducato | Jumper | Boxer > 2007 - L2H2 3.25m	•		
301650	Ducato | Jumper | Boxer > 2007 - L3H2 3.75m|L4H2 4.00m	•		
308073	Mercedes Sprinter > 2007 | VW Crafter 2007-2016	•		
301668	Mercedes Sprinter > 2007 | VW Crafter 2007-2016 OE Track	•		
308059	Renault Master | Opel Movano 1998-2010	•		
301768	VW Crafter > 2017 | MAN TGE H3 LHD	•		
301771	VW Crafter > 2017 | MAN TGE H3 RHD	•		
308959	Renault Master | Opel Movano > 2011	•		

306777	Thule LED Mounting Rail TO 6300/6200/9200

RELATED PRODUCTS

- Thule LED Strip 4.00 m - 307135
- Thule LED Strip 5.00 m - 307136
- Thule LED Strip 6.00 m - 307137

Thule Tent LED Mounting Rail TO 6300/6200

INFO

- This caravan profile can be slid at the bottom of roof awnings:
  - Thule Omnistor 6300 | 6200 mounted on a van
  - Thule Omnistor 6300 | 6200 | 9200 mounted on a motorhome, only if you have min. 24 mm depth and min. 17 mm height (see figure)
- Makes it possible to have light on the outside even when the awning is closed
- Provided with a channel which makes it possible to install a Thule QuickFit tent or to hang up the Thule Organizers
- Fits only with the Thule Led Strip Sideways - not included
- Colour: anthracite
- Content:
  - 3 profiles (3x 1.30 m) to fit a 4.00 m awning length - can be cut to the required length
  - 2 end caps for a perfect finish

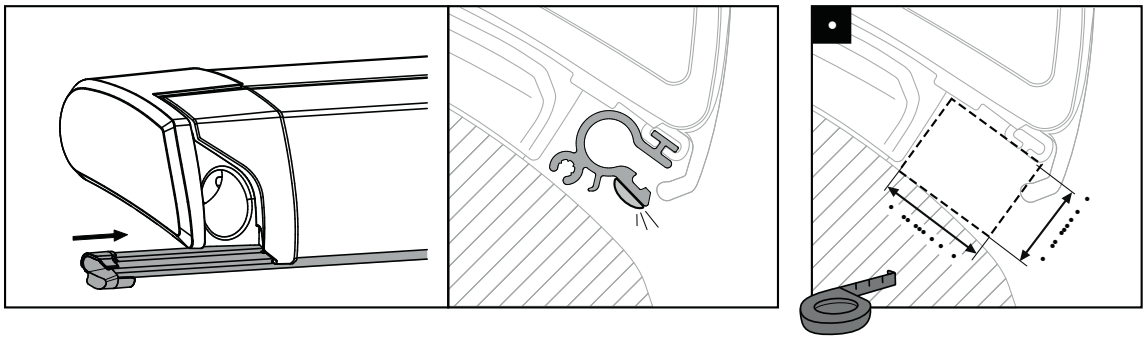

301664	Thule Tent LED Mounting Rail TO 6300/6200

RELATED PRODUCT

- Thule LED Strip Sideways - 301660

Thule Tent LED Mounting Rail TO 5200

INFO

- This profile makes it possible to mount the Thule QuickFit tent on wall awning TO 5200
- The profile is clicked at the bottom of the awning cassette and is fixed with a hex wrench
- It covers the adapters and is provided with a channel to slide the tent in
- Additional space for a Thule LED Strip - to have light on the outside even when the awning is closed
- Available in different lengths and 3 colours: white, anodised and anthracite
- Content:
  - Aluminium caravan profile
  - 2 end caps
  - diffuse filter for the LED channel

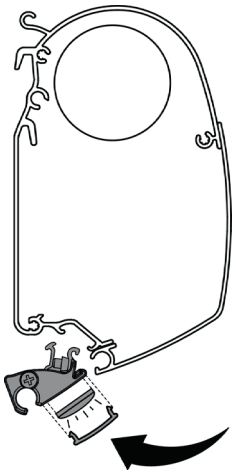

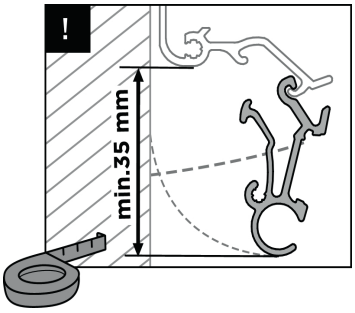

LENGTH	WEIGHT WITHOUT LED	WEIGHT WITH LED	WHITE	ANODISED	ANTHRACITE
3.00 m	1.2 kg	1.4 kg	301250	301255	301260
3.50 m	1.4 kg	1.6 kg	301251	301256	301261
4.00 m	1.6 kg	1.8 kg	301252	301257	301262
4.50 m	1.8 kg	2 kg	301253	301258	301263
5.00 m	2 kg	2.2 kg	301254	301259	301278

RELATED PRODUCTS

- Thule LED Strip 4.00 m - 307135
- Thule LED Strip 5.00 m - 307136
- Thule LED Strip 6.00 m - 307137

Thule Tension Rafter G2

INFO

- Additional awning rafter to ensure an optimal tensioned awning fabric for increased wind resistance
- Innovative concept: optimal tension ensured by length lock system
- Improved awning fixation parts
- No heavy manpower needed for the installation
- Easy to use in only 3 simple steps:
  - Step 1: Open the awning completely
  - Step 2: Place the rafter into the awning. This is effortless due to the smooth integrated spring
  - Step 3: Slightly roll-up the awning fabric until it's blocked
- Length Lock can be set on different projections for a perfect combination with other Thule accessories (e.g. Smart Panels, awning tents)
- Made of durable materials: anodised aluminium in combination with high impact plastics

THULE TENSION RAFTER G2		
PROJECTION	**AWNING TYPE**	**SKU NO**
2.00 m*	TO 5200/4900/5003/5002/4200	307307
	TO 6300/6200/6002	307308
2.50 m	TO 5200/4900/5003/5002/4200	307309
	TO 6300/6200/6002	307310
	TO 1200**	307311
2.75 m	TO 8000/6900	307312
3.00 m	TO 9200	307313

*The rafter fits only at the side of the awning, not at the middle
** The rafter can not be placed in case you add a Thule QuickFit tent to your TO 1200 awning

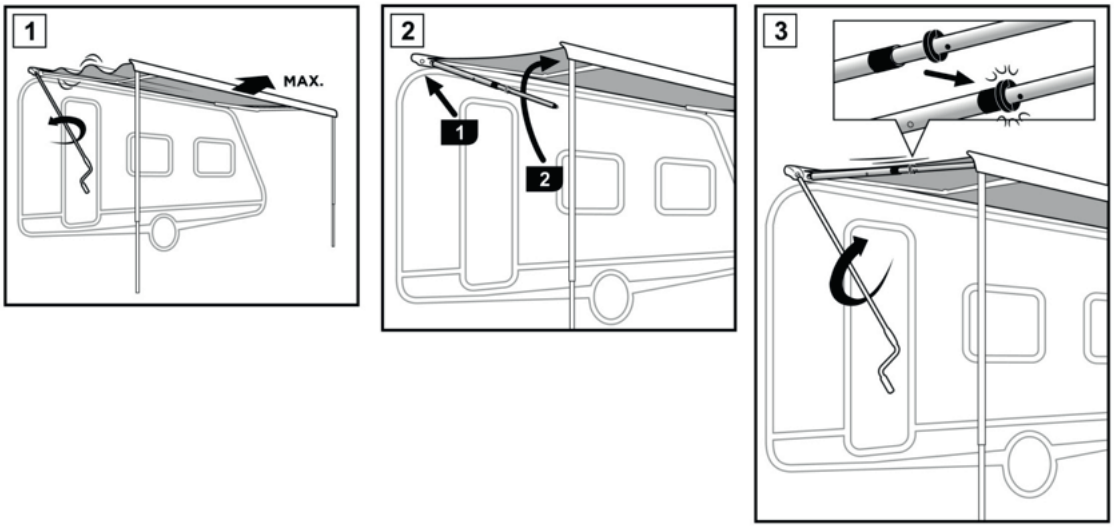

Thule Tension Arm Set TO 5200 V2

INFO

- Only suitable for wall awning Thule Omnistor 5200
- Sturdy spring arms with patented tension arms ensure a perfectly tensioned awning fabric and increase the wind-resistance
- Standard integrated for awning lengths from 4.02 m and more
- Optional for awning lengths 3.02 m and 3.52 m
- Content:
  - set of 2 tension arms

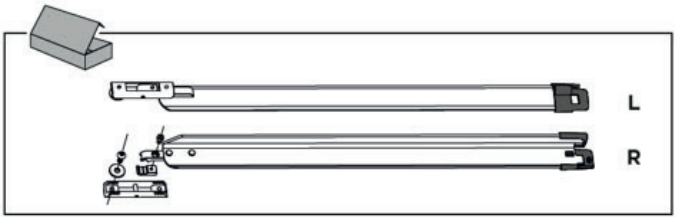

301659	Thule Tension Arm Set TO 5200 V2

Thule Tension Arm Set TO 6300

INFO

- Only suitable for roof awning Thule Omnistor 6300
- Sturdy spring arms with patented tension arms ensure a perfectly tensioned awning fabric and increase the wind-resistance
- Standard integrated for awning lengths from 3.75 m and more
- Optional for awning lengths 3.00 m, 3.25 m and 3.50 m
- Not suitable for awning length 2.60 m
- Content:
  - set of 2 tension arms

302095	Thule Tension Arm Set TO 6300

Thule Fabric Clamps

INFO

- Set of two clamps to avoid a flappy awning
- Provide a more secure fastening between the awning fabric and the tension or blocker rafter to prevent the unpleasant noise of a flapping awning fabric due to wind
- Just click it on the rafter, put the fabric in between and tighten with the handle
- Use up to two clamps on one side of the awning
- Fits:
  - the oval side blocker rafter
  - Thule Tension Rafter G2
  - the square telescopic tension rafter for Thule Omnistor 1200
- Content:
  - 2 clamps

309698	Thule Fabric Clamps

Thule 3rd Support Leg

INFO

- To reinforce the longer lengths of awning tents Thule Panorama and Thule Residence G2 | G3 in combination with a rafter
- Not suitable to use in combination with awning tent Thule QuickFit
- Can be installed on all awning types from 3.75 m length on, with the exception of the Thule 4200
- Content:
  - 1 support leg

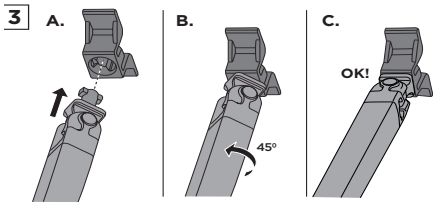

306778	Thule 3rd Support Leg

Thule Hold Down Kit

INFO

- Prevents the awning and tent from flying up
- Installed over the entire length between the spring arms and the fabric
- For any type of awning and tent up to and including 6 m
- Not suitable to use in combination with awning tents Thule Panorama, Thule Residence G2 | G3 and Smart Panels
- Content:
  - 1 black strap (11 m)
  - installation material
  - supports
  - storage bag
  - pegs

307906	Thule Hold Down Kit

Thule Hold Down Side Strap Kit

INFO

- Prevents the awning and tent from damage due to high wind or storm
- Attached to the support legs of Thule Omnistor awnings in order to prevent damage to the fabric
- Can easily be used in combination with a Thule awning tent and Smart Panels
- Content:
  - 2 black straps (both 3.00 m)
  - installation material
  - supports
  - storage bag
  - pegs

307916	Thule Hold Down Side Strap Kit

Thule Motor Kit TO 5200

INFO

- 12 VDC motor for wall awning Thule Omnistor 5200
- Retrofit installation: by replacing the gearbox of a manual TO 5200 awning (only for awning lengths from 3.02 m and more)
- The motor is pre-installed on a limited range:
  - awning lengths from 3.00 m to 5.00 m
  - fabric finish Mystic Grey 31
- Easy operation:
  - one-touch switch to start the motor
  - motor stops automatically when awning is fully opened or closed
  - Auto-Tension: motor retracts in open position
- Integrated manual override with hand crank in case of power failure
- Motor with thermal protection
- EMC approved
- Reverse polarity and short circuit protected
- Comes with a relay in order to prevent that the awning can be operated while driving
- Only 1 kg additional weight compared to a manual awning
- Same design as a manual awning with only 3cm additional length
- Different colours available: white, anodised and anthracite
- Consumption: out 3A / in 7A / peak 17A
- Noise level: 65 dBA

301296	Thule Motor Kit TO 5200 - White
301297	Thule Motor Kit TO 5200 - Anodised
301298	Thule Motor Kit TO 5200 - Anthracite
301479	12V Motor cable 4 mm^2 - 2x 12 m*

*The voltage should retain a minium of 12V at the power source.
If due to the cable length, the resulting voltage at the motor drops below 9V at peak usage of 20.5A, the motor might stall. Thule advises to use ø 4 mm^2 (AWG 11) copper wiring instead of ø 2.5 mm^2 (AWG 13) when the connecting cable length exceeds 10 meters.

Thule Motor Kit TO 6300

INFO

- 12 VDC motor for Thule Omnistor 6300 awning
- Retrofit installation: by replacing the gearbox of a manual TO 6300 awning
- Pre-installed on a limited range:
  - awning lengths from 3.00 m to 5.00 m
  - fabric finish Mystic Grey 31
- Easy operation:
  - one-touch switch to start the motor
  - motor stops automatically when awning is fully opened or closed
  - Auto-Tension: motor retracts in open position
- Integrated manual override with hand crank in case of power failure
- Motor with thermal protection
- EMC approved
- Reverse polarity and short circuit protected
- Comes with a relay in order to prevent that the awning can be operated while driving
- Only 1 kg additional weight compared to a manual awning
- Same design as a manual awning with only 3 cm additional length
- Different colours available: white, anodised and anthracite
- Consumption: out 3A / in 7A / peak 17A
- Noise level: 65 dBA

302096	Thule Motor Kit TO 6300 - White
302097	Thule Motor Kit TO 6300 - Anodised
302098	Thule Motor Kit TO 6300 - Anthracite
301479	12V Motor cable 4 mm^2 - 2x 12 m*

*The voltage should retain a minium of 12V at the power source.
If due to the cable length, the resulting voltage at the motor drops below 9V at peak usage of 20.5A, the motor might stall. Thule advises to use ø 4 mm^2 (AWG 11) copper wiring instead of ø 2.5 mm^2 (AWG 13) when the connecting cable length exceeds 10 meters.

Thule Motor Kit 230V EM - TO 8000/9200

SPECIFICATIONS

- Retrofit installaton
- Easy to use
- Security operation

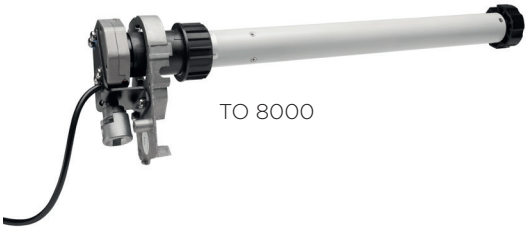

TO 8000

TO 9200

INFO

- 230 VAC EM (= electronical-mechanical limit switch) motor
- Includes remote control and control box
- A control box ensures that the awning cannot be opened whilst the vehicle is moving
- Simple connection to a 230 VAC supply (with a 12V connection you can use a 300 Watt inverter)
- Settings are set by an electronical limit switch (closed position) and a mechanical limit switch (open position) so that the frame always closes correctly
- The manual override can easily be done with a handcrank so that the awning can be operated at any time, even during a power failure
- Use an inverter which meets these specifications:
  - Input: 10-15 V DC
  - Output: 230 VAC/50Hz
  - Capacity: 300W permanent, 600W max
  - Efficiency (for rectangle wave): min. 90%
- The D+ connection is included in the control box
- Possibility to operate the motor unit by a wired switch connection*
- Measurements control box: 160x92x51 mm
- Cable length motor: 5 m
- Power supply: 3x 1,5 mm²
- EMC approved
- Motor with thermal protection

* Monostable switch required (ON)-OFF-(ON)/ (NC)-NO-(NC)
Awning will open completely with one touch

THULE OMNISTOR 8000	
302645	Thule Motor Kit TO 8000 - White
302646	Thule Motor Kit TO 8000 - Anodised
302647	Thule Motor Kit TO 8000 - Cream
302648	Thule Motor Kit TO 8000 - Anthracite

THULE OMNISTOR 9200	
302685	Thule Motor Kit TO 9200 - White
302686	Thule Motor Kit TO 9200 - Anodised
302687	Thule Motor Kit TO 9200 - Cream

Thule Sealing Rubber

INFO

- Ensures that the gap between the vehicle and the wall awning is sealed
- Can be cut to the exact length that is required

THULE OMNISTOR 5200 | 5003 | 8000		
SKU NO	**WIDTH**	**LENGTH**
307904	8 cm - Large	30.00 m
307961	8 cm - Large	4.00 m
307901	5 cm - Small	30.00 m
307960	5 cm - Small	4.00 m

For TO 5200 | 5003 | 8000

New

THULE 4200	
SKU NO	
306891	Thule Sealing Rubber T 4200 / TO 4900 - 30.00 m
302690	Thule Sealing Rubber T 4200 - 4.50 m white
302691	Thule Sealing Rubber T 4200 - 4.50 m anthracite
302692	Thule Sealing Rubber T 4200 - 125 m white
302693	Thule Sealing Rubber T 4200 - 125 m anthracite

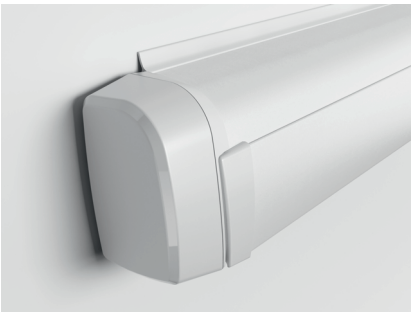

For T 4200

Thule Gutter

INFO

- Self-adhesive drainage system
- Fits just below the awning
- Fits most caravans and motorhomes
- Content:
  - 1 gutter

SKU NO	WIDTH	HEIGHT	LENGTH
307947	17 mm	18 mm	3.50 m
307900	17 mm	18 mm	30.00 m
307967	17 mm	18 mm	4.50 m

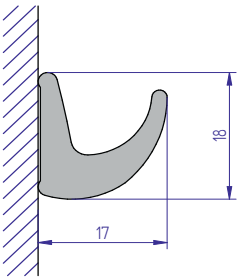

Thule EPDM Sealing

INFO

- Seals the gap between the vehicle and roof awning (TO 9200/6300/6200)
- Made from black EPDM foam with closed cell structure
- Thickness: 25 mm
- Width: 30 mm
- Self-adhesive
- Content:
  - 2x 2.00 m

308697	Thule EPDM Sealing

Thule PVC Cleaner

INFO

- An easy to use cleaner for PVC, awning fabric and other plastic materials
- Supplied in a user-friendly spray bottle
- Protects by applying a water-repellent and anti-static film
- Usage instruction: spray on the surface, rub with a damp cloth, rinse with clean water and let dry
- Composed with anionic (< 0,5%) and non-ionic (< 0,5%), biodegradable detergent
- Contains no abrasive or aggressive components
- Keep bottle out of children's reach
- Content:
  - Spray bottle (500 ml)

307585	Thule PVC Cleaner (per 24 pcs)

Thule Repair Patch

INFO

- To repare small holes in the awning or tent fabric
- Self-adhesive, transparent patches
- Dimensions: 7.5 x 15 cm
- Content:
  - 3 patches

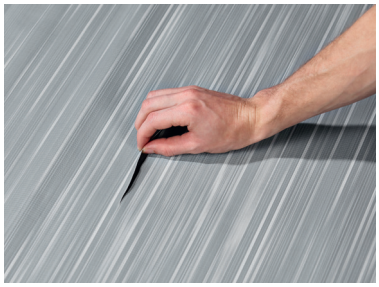

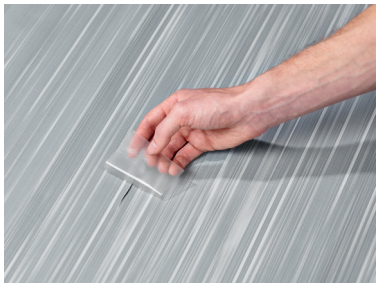

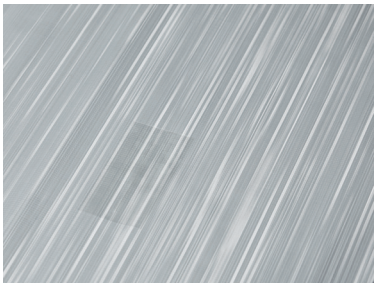

306486	Thule Repair Patch

Smart Panels

SMART PANELS	
Fit Guide	82
Thule Windscreen	83
Thule Sun Blocker G2 - Side Panel	84
Thule Rain Blocker G2 - Side Panel	85
Thule View Blocker G2 - Side Panel	87
Thule Sun Blocker G2 - Front Panel	88
Thule Rain Blocker G2 - Front Panel	89
Thule View Blocker - Front Panel	92
Thule Rain Blocker G2 - Pack Compact Van	93
Thule Luxury Blocker Bag	94
New Thule Subsola	95

Smart Panels - Fit Guide

KEY INFORMATION

1 Select your vehicle type

❍ Motorhome

❍ Caravan

❍ Van

❍ Compact van

2 Select your awning type (check the label in the awning box)

Wall-mounted awning
- ❍ TO 5200
- ❍ TO 8000
- ❍ TO 4900
- ❍ TO 5102
- ❍ T 3200
- ❍ T 4200
- ❍ TO 2000
- ❍ TO 5003
- ❍ TO 5002
- ❍ Tristor
- ❍ TristorII
- ❍ V10XL

Roof-mounted awning
- ❍ TO 9200
- ❍ TO 6300
- ❍ TO 6200
- ❍ TO 6900

Rail-mounted awning
- ❍ TO 1200

3 Select your awning length (check the label in the awning box)

- ❍ 1.90 m
- ❍ 2.30 m
- ❍ 2.50 m
- ❍ 2.60 m
- ❍ 2.70 m
- ❍ 3.00 m
- ❍ 3.15 m
- ❍ 3.25 m
- ❍ 3.50 m
- ❍ 3.75 m
- ❍ 4.00 m
- ❍ 4.25 m
- ❍ 4.50 m
- ❍ 5.00 m
- ❍ 5.50 m
- ❍ 6.00 m

4 Select your awning projection

- ❍ 2.00 m
- ❍ 2.50 m
- ❍ 2.75 m
- ❍ 3.00 m

5 Measure your mounting height

Mounting height = distance between bottom of awning cassette and ground:

	Mounting Height	Model
❍	2.15 - 2.29 m	S
❍	2.30 - 2.44 m	M
❍	2.45 - 2.59 m	L
❍	2.60 - 2.74 m	XL
❍	2.75 - 2.89 m	XXL
❍	2.90 - 3.10 m	3XL

Thule Windscreen

INFO

• Height	1.55 m
• Fabric height	1.38 m
• Length	Up to 3.00 m extension
• Weight	4.50 kg
• Colour	Grey (transparent screen)

FEATURES

- Protection against wind as well as an easy way to create privacy
- Micro-aired to avoid the wind from pushing too much the fabric
- Quick & easy to install thanks to its automatic roll in/out system
- Can be fixed to the vehicle via wall fixation or into the caravan rail via the rope fixation
- Unroll it and connect it to the awning support leg or make it free standing using the delivered strap kit
- Storage bag included
- Content:
  - windscreen
  - rope fixation (caravan)
  - 2x wall fixation (motorhome)
  - adapter
  - guy-ropes
  - 4 pegs
  - storage bag

Instruction manual

306456	Thule Windscreen

- Rope fixation (caravan)

- Wall fixation

- Storage bag

Thule Sun Blocker G2 - Side

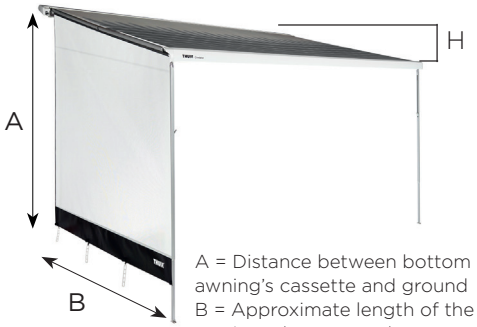

A = Distance between bottom of awning's cassette and ground
B = Approximate length of the awning when opened
H = Awning incline

INFO

- Mounting height (A) 1.90 m - 2.64 m
- Projection (B) 2.00 m, 2.50 m, 2.75 m, 3.00 m
- Colours Black, grey (transparent screen)
- Available for Thule (Omnistor) awnings:
  - 5200, 8000, 4900, 200, 5102, 3200, 9200, 6300, 1200*
  - 4900, 6200, 5003
  - 5002, 6900, Tristor, TristorII, V10XL by adding spare parts
  *Special model for Thule Omnistor 1200
  - Not compatible with Master Movano adapter (ref. 308059)

FEATURES

- Lets the breeze in while keeping the sun out, without loss of view
- Easy and quick installation:
  - the side panel slides into an aluminium rafter with channel, installed between the awning's cassette and lead rail
- Modular system:
  - combination of a panel with the Thule QuickFit tent possible (only in case of same mounting height)
  - side panel can be installed on both sides of the awning with the same rafter
- Durable material:
  - aluminium rafter
  - micro-aired screen fabric, a transparent and light screen fabric
- Content:
  - 1 side panel
  - 1 aluminium rafter with channel
  - connection pieces for Thule Omnistor awnings for both sides of the awning
  - ground fixation: pegs and ropes

User instruction

MODULARITY

AWNING	PROJECTION (B)	MOUNTING HEIGHT (A)		H	WEIGHT	SKU NO
5200 • 4900 • 5102 • 6300 • 6200 • 5003 • 5002 • 4200	2.00 m	1.90 m - 2.24 m	Small	21 cm	2.7 kg	307399
3200	2.50 m	1.90 m - 2.24 m	Small	21 cm	3.5 kg	301338
5200 • 4900 • 6300 • 6200 • 5003 • 5002 • 4200		2.25 m - 2.44 m	Medium	23 cm	3.6 kg	307278
		2.45 m - 2.64 m	Large	43 cm	3.6 kg	307279
1200		2.25 m - 2.49 m	TO 1200	48 cm	3.8 kg	307398
8000 • 6900	2.75 m	2.25 m - 2.44 m	Medium	23 cm	4 kg	307280
		2.45 m - 2.64 m	Large	43 cm	4 kg	307281
9200	3.00 m	2.25 m - 2.44 m	Medium	23 cm	4.4 kg	307282
		2.45 m - 2.64 m	Large	43 cm	4.4 kg	307283

Thule Rain Blocker G2 - Side

INFO

- Mounting height (A) 1.80 m - 3.04 m
- Projection (B) 2.00 m, 2.50 m, 2.75 m, 3.00 m
- Colours Black, white, grey
- Available for Thule (Omnistor) awnings:
  - 5200, 8000, 4200, 5102, 3200, 9200, 6300, 1200
  - 4900, 5003, 6200
  - 5002, 6900, Tristor, TristorII, V10XL by adding **spare parts**
  - Special model for TO 1200, Ducato H2: can be combined with a Thule Rain Blocker G2 Front Panel
  - Not compatible with Master Movano adapter (ref. 308059)

A = Distance between bottom of awning's cassette and ground
B = Approximate length of the awning when opened
H = Awning incline

FEATURES

- Protects against wind and rain while keeping the incidence of light thanks to the large window
- Easy and quick installation:
  - the side panel slides into an aluminium rafter with channel, installed between the awning's cassette and lead rail
  - can easily be attached to the support leg of the awning or to another Thule Rain Blocker G2 panel thanks to the smart connections
- Modular system:
  - various possibilities to combine the different panels
  - side panels can be installed on both sides of the awning with the same rafter
- Durable materials:
  - aluminium rafter
  - top-quality PVC fabric with welded connections of the fabric
- Content:
  - 1 side panel
  - 1 aluminium rafter with channel
  - connection pieces for Thule Omnistor awnings for both sides of the awning
  - smart connections to connect the panel with the awning support leg
  - ground fixation: pegs and pins

Instruction manual

Compact van

- VW California T5/T6 > 2003
- PSA Minivan > 2016

Van

- Fiat Ducato > 2006
- Peugeot Boxer > 2006
- Citroën Jumper > 2006
- VW Crafter > 2017
- Ford Transit H3

INSTALLATION

MODULARITY

AWNING	PROJECTION (B)	MOUNTING HEIGHT (A)		H	WEIGHT	SKU NO
5200 • 4900 • 5102 • 4200	2.00 m	1.80 m - 1.99 m	Minivan	21 cm	4 kg	306515
5200 • 4900 • 6300 • 6200 • 5003 • 5002 • 4200		2.05 m - 2.24 m	Small*	23 cm	4 kg	307400
Caravan (1200)		2.35 m - 2.54 m	Caravan / TO 1200 V2*	32 cm	4 kg	310204
3200	2.50 m	1.80 m - 1.99 m	Minivan	27 cm	4.5 kg	301339
5200 • 4900 • 6300 • 6200 • 5003 • 5002 • 4200		2.05 m - 2.24 m	Small*	23 cm	4.8 kg	307291
		2.25 m - 2.44 m	Medium	23 cm	5 kg	307292
		2.45 m - 2.64 m	Large	43 cm	5 kg	307293
		2.65 m - 2.84 m	X-Large	63 cm	5 kg	307294
1200		2.35 m - 2.54 m	TO 1200 V2*	50 cm	4.8 kg	301422
6300 • 6200**		2.30 m - 2.50 m	Van	37 cm	5 kg	307302
6300 • 6200		2.35 m - 2.54 m	Caravan	33 cm	5 kg	301332
5200***		2.30 m - 2.50 m	Van	37 cm	5 kg	310223
8000 • 6900	2.75 m	2.25 m - 2.44 m	Medium	23 cm	5.6 kg	307295
		2.45 m - 2.64 m	Large	43 cm	5.6 kg	307296
		2.65 m - 2.84 m	X-Large	63 cm	5.6 kg	307297
		2.85 m - 3.04 m	XX-Large	83 cm	5.8 kg	306516
9200	3.00 m	2.25 m - 2.44 m	Medium	23 cm	5.8 kg	307298
		2.45 m - 2.64 m	Large	43 cm	5.8 kg	307299
		2.65 m - 2.84 m	X-Large	63 cm	6 kg	307300
		2.85 m - 3.04 m	XX-Large	83 cm	6 kg	306517

*Not possible to use in combination with a Thule QuickFit | EasyLink awning tent

** Fiat Ducato > 2006 / Peugeot Boxer > 2006 / Citroën Jumper > 2006 / VW Crafter > 2017

*** Ducato H2 / Ford Transit H3

Thule View Blocker G2 - Side

INFO

- Mounting height (A) 2.25 m - 2.64 m
- Projection (B) 2.50 m
- Colours Black, white, grey
- Available for Thule (Omnistor) awnings:
  - 5200, 4900, 6300, 6200, 5003, 4200

A = distance between bottom of awning's cassette and ground
B = approximate length of the awning when opened
H = awning incline

FEATURES

- Protects against rain, wind and sun whilst creating complete privacy
- Easy and quick installation:
  - the side panel slides into an aluminium rafter with channel, installed between the awning's cassette and lead rail
  - can easily be attached to the support leg of the awning or to other Thule Rain Blocker G2 panels thanks to the smart connections
- Modular system:
  - various possibilities to combine with Thule Rain Blocker G2 front panels
  - combination of a panel with the Thule QuickFit tent possible (only in case of same mounting height)
  - side panel can be installed on both sides of the awning with the same rafter
- Durable material:
  - aluminium rafter
  - top-quality non-transparent PVC fabric with welded connections of the fabric
- Content:
  - 1 side panel
  - 1 aluminium rafter with channel
  - connection pieces for Thule Omnistor awnings for both sides of the awning
  - smart connections to connect the panel with the awning support leg
  - ground fixation: pegs and pins

AWNING	PROJECTION (B)	MOUNTING HEIGHT (A)		H	WEIGHT	SKU NO
5200 • 4900 • 5102 • 4200	2.00 m	2.05 m - 2.24 m	Small	22 cm	4 kg	310202
5200 • 4900 • 6300 • 6200 • 5003 • 5002 • 4200	2.50 m	2.05 m - 2.24 m	Small	22 cm	4 kg	310203
		2.25 m - 2.44 m	Medium	23 cm	5 kg	308380
		2.45 m - 2.64 m	Large	43 cm	5 kg	308381
1200	2.50 m	2.35 m - 2.54 m	Caravan	48 cm	5.4 kg	310201

Thule Sun Blocker G2 - Front

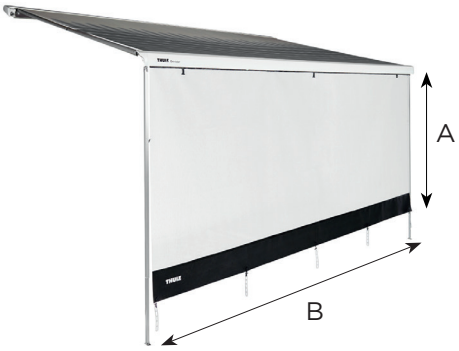

INFO

- Height (A) 1.70 m
- Length (B) 1.00 m - 4.80 m
- Colours Black, grey (transparent screen)
- Available for Thule (Omnistor) awnings:
  - 5200, 8000, 4900, 4200, 5102, 3200, 9200, 6300, 1200
  - 4900, 2000, 5002, 6200, 6900, 5003, Tristor, TristorII, V10XL

A = Approximate height of the panel
B = Approximate length of the panel

FEATURES

- Lets the breeze in while keeping the sun out, without loss of view
- Easy and quick installation:
  - the front panel is suitable for all Thule Omnistor awnings
  - the panel easily slides into the awning's lead rail
  - all front panels can be rolled up and are fixed with a side release buckle
- Modular system:
  - combination of a panel with the Thule QuickFit tent is possible
  (only in case the tent is smaller than the awning and if there is some space in the awning's lead rail to slide the panel in)
- Fabric material:
  - micro-aired screen fabric, a transparent and light screen fabric
- Content:
  - 1 front panel
  - ground fixation: pegs and ropes

User instruction

MODULARITY

AWNING	LENGTH (B)	MIN. AWNING LENGTH	HEIGHT (A)	WEIGHT (bruto)	SKU NO
All Thule (Omnistor) awnings	1.00 m	-	1.70 m	1.3 kg	307284
	2.40 m	2.60 m		2.1 kg	307285
	2.80 m	3.00 m		2.4 kg	307286
	3.30 m	3.50 m		2.7 kg	307287
	3.80 m	4.00 m		3 kg	307288
	4.30 m	4.50 m		3.3 kg	307289
	4.80 m	5.00m		3.6 kg	307290

Thule Rain Blocker G2 - Front

INFO

- Height (A) 1.85 m, 2.10 m, 2.30 m
- Length (B) 1.02 m - 2.00 m
- Colours Black, white, grey
- Available for Thule (Omnistor) awnings:
  - 5200, 8000, 4200, 5102, 3200, 9200, 6300, 1200
  - 5002, 4900, 2000, 6900, 6200, 5003, Tristor, TristorII, V10XL

A = Approximate height of the panel
B = Approximate length of the panel

FEATURES

- Protects against rain and wind while keeping the incidence of light thanks to the large window
- Easy and quick installation:
  - the front panel slides into the awning's lead rail
  - all panels can be rolled up and are fixed with a side release buckle
- Modular system:
  - various possibilities to combine the different panels thanks to smart connections
- Fabric material:
  - top-quality PVC fabric with welded connections of the fabric
- Content:
  - 1 front panel
  - smart connections to connect with other Thule Rain Blocker G2 Front Panels
  - ground fixation: pegs and pins

MODULARITY

User instruction

AWNING	PANEL TYPE	LENGTH (B)	HEIGHT (A)	WEIGHT (bruto)	SKU NO
Combine with side panel: Compact Van					
3200	J	1.12 m	1.85 m	1.9 kg	301354
3200 • 5200 • 4900 • 5102 • 4200	A	1.27 m		2 kg	306454
3200	K	1.47 m		2.2 kg	301355
3200	L	1.81 m		2.5 kg	301356
Combine with side panels: Small and TO 1200 V2					
All Thule (Omnistor) awnings	B	1.27 m	2.10 m	2.2 kg	301320
	C	1.47 m		2.4 kg	301321
	D	1.67 m		2.6 kg	301322
	E	1.92 m		3 kg	301323
Combine with side panels: Medium, Large, X-Large, XX-Large, Van and Caravan					
All Thule (Omnistor) awnings	F	1.02 m	2.30 m	2 kg	307303
	G	1.52 m		2.4 kg	307304
	H	1.72 m		2.6 kg	307305
	I	2.00 m		3 kg	307306

PANEL TYPE

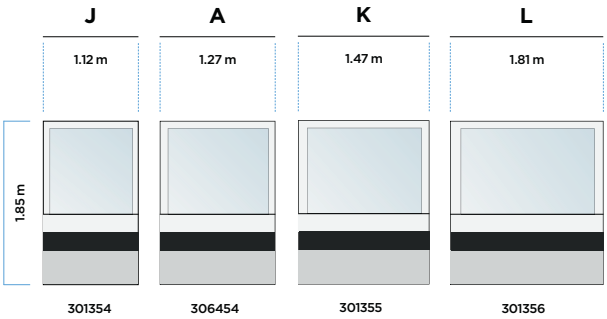

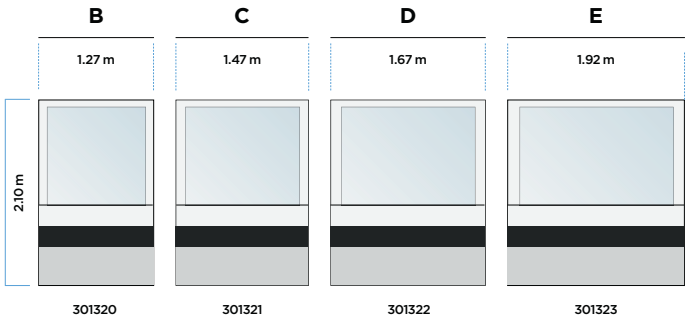

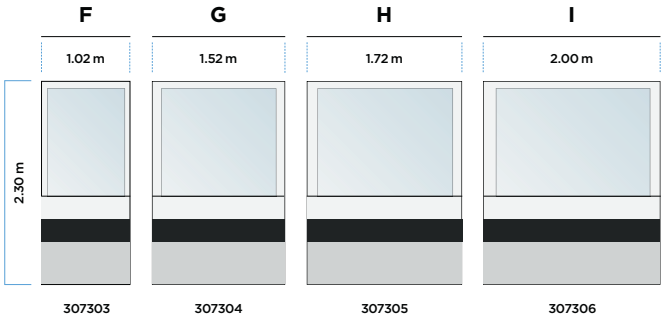

FRONT COMBINATION

- Full front combination possible
- Connection pieces to the next front panel included
- Thule advises the following combinations for full awning length

COMPATIBLE SIDE PANEL	AWNING LENGTH (L)	FRONT COMBINATION
COMPACT VAN	2.50 m	J + A
	2.60 m	A + A
	2.70 m	J + K
	3.00 m	J + L
S TO 1200 V2	2.60 m	B + B
	2.80 m	B + C
	3.00 m	B + D
	3.25 m	B + E
	3.50 m	C + E
	3.75 m	D + E
	4.00 m	E + E
	4.25 m	B + C + C
	4.50 m	C + C + C
	5.00 m	D + D + D
	5.50 m	D + E + E
M L XL XXL VAN CARAVAN	3.00 m	F + F + F
	3.25 m	G + H
	3.50 m	F + G + F
	3.75 m	H + I
	4.00 m	F + I + F
	4.25 m	F + G + H
	4.50 m	F + I + G
	5.00 m	G + I + G
	5.50 m	I + G + I
	6.00 m	I + I + I

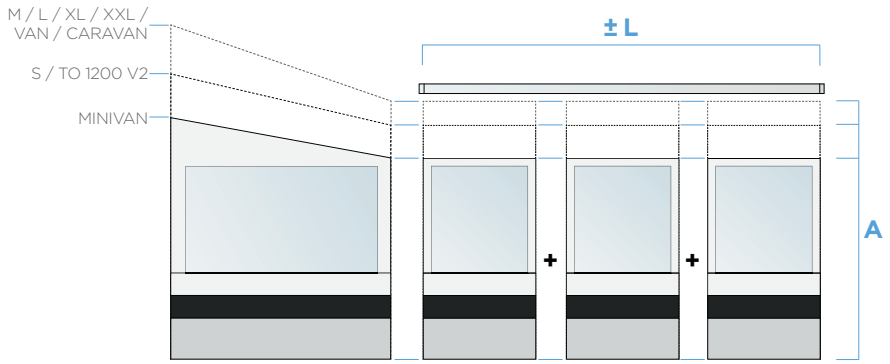

Thule View Blocker - Front

INFO

- Height (A) 1.40 m
- Length (B) 2.40 m, 2.80 m, 3.30 m, 3.80 m, 4.30 m, 4.80 m
- Colours Grey (non-transparent)
- Available for Thule (Omnistor) awnings:
  - 8000, 5200, 4200, 9200, 6300, 1200, 5102
  - 5003, 5002, 4900, 6900, 6200, 2000, Tristor, TristorII, V10XL

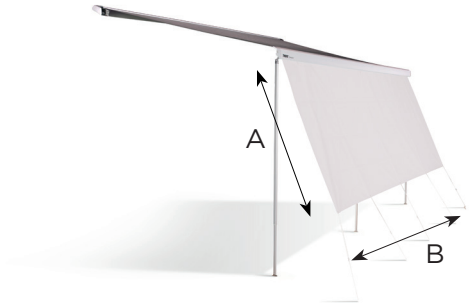

A = approximate height of the panel
B = approximate length of te panel

FEATURES

- Offers protection against rain, wind and sun and easily creates privacy as well
- Easy and quick installation:
  - the front panel slides into the awning's lead rail
  - all panels can be rolled up and are fixed with straps
- Durable material:
  - micro-aired screen fabric
- Content:
  - 1 front panel
  - ground fixation: pegs and ropes

AWNING	LENGTH (B)	HEIGHT (A)	WEIGHT (bruto)	SKU NO
All Thule (Omnistor) Awnings	2.40 m	1.40 m	2.5 kg	307588
	2.80 m		2.8 kg	307592
	3.30 m		3.2 kg	307594
	3.80 m		3.4 kg	307596
	4.30 m		3.8 kg	307598
	4.80 m		4 kg	307600

Thule Rain Blocker G2 Pack Compact Van

INFO

- Mounting height (A) 1.80 m - 1.99 m
- Projection (B) 2.00 m
- Colours Black, white, grey
- Available for Thule (Omnistor) awnings:
  5102 (2.60 m) - 4200 (2.60 m) - 4900 (2.60 m)

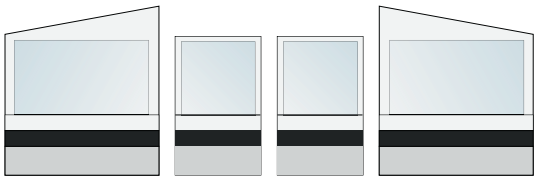

A = distance between bottom of awning's cassette and ground
B = approximate length of the awning when opened
H = awning incline

FEATURES

- Set of 2 side panels and 2 front panels (1.27 m) for Thule Omnistor 5102, Thule Omnistor 4900 and Thule 4200 awning length 2.60 m, mounted on compact vans
- Protects against wind and rain while keeping the incidence of light thanks to the large window
- Easy and quick installation:
  - the side panel slides into an aluminium rafter with channel, installed between the awning's cassette and lead rail
  - can be easily attached to the support leg of the awning or to another Thule Rain Blocker G2 panel thanks to the smart connections
- Durable materials:
  - aluminium rafter
  - top-quality PVC fabric with welded connections of the fabric
- A luxurious blocker bag is included to store your tension rafters, panels and fixation material
- Content:
  - 2 side panels
  - 2 aluminium rafters with channel
  - 2 front panels (1.27 m - type A)
  - connection pieces for Thule Omnistor awnings for both sides of the awning
  - smart connections to connect the panel with the awning support leg and front panels
  - ground fixation: pegs and pins
  - luxury blocker bag

SUITABLE COMPACT VANS

- Volkswagen T5/T6 (California, ...)
- Ford Custom
- Ford Custom Nugget
- Peugeot Traveller, Citroën Spacetourer (Campster), Toyota Proace
- Renault Trafic
- Mercedez Benz V-Klasse Marco Polo
- PSA minivan > 2016

Thule Rain Blocker G2 Pack Compact Van						
AWNNG	PROJECTION (B)	MOUNTING HEIGHT (A)		H	WEIGHT	SKU NO
5102 • 4900 • 4200 (2.60 m)	2.00 m	1.80 m - 1.99 m	Minivan	21 cm	12 kg	301329

Thule Luxury Blocker Bag

INFO

- Luxurious bag to store the tension rafter, panel and fixation material
- Colour: black
- Dimensions: 130 L x 20 cm W x 20 cm H

301568	Thule Luxury Blocker Bag

New Thule Subsola

INFO

Awning Mounting Height (A)	1.90 - 2.24 m
Awning Projection	2 m
Color	Vapor Gray
Awning compatibility	Thule (Omnistor) awnings of 2.60 m length and 2.00 m extension: T 4200 | TO 4900 | Thule HideAway | TO 5102 | TO 5200 | Thule VW awning | Thule Sidehill (new 2025)
Packaging (WxLxH)	16 x 80 x 16 cm 6 x 31 x 6 in

SPECIFICATIONS

- Extend the living space outside of your van's awning and enjoy more privacy
- Breathable, water-resistant fabric offers privacy and protection against sun and rain
- The triangular panels with high-quality zippers and keders can be combined in different ways for the perfect setup
- Adjustable pole allows you to easily generate more privacy when needed or adjust the panels as weather changes
- Panels can be easily stored in a high-quality bag so you always bring everything you need
- Available in a side and front package and both packages can be combined, with the extra possibility to add additional panels or poles (sold separately) to customize your outdoor setup even more

DIMENSIONS

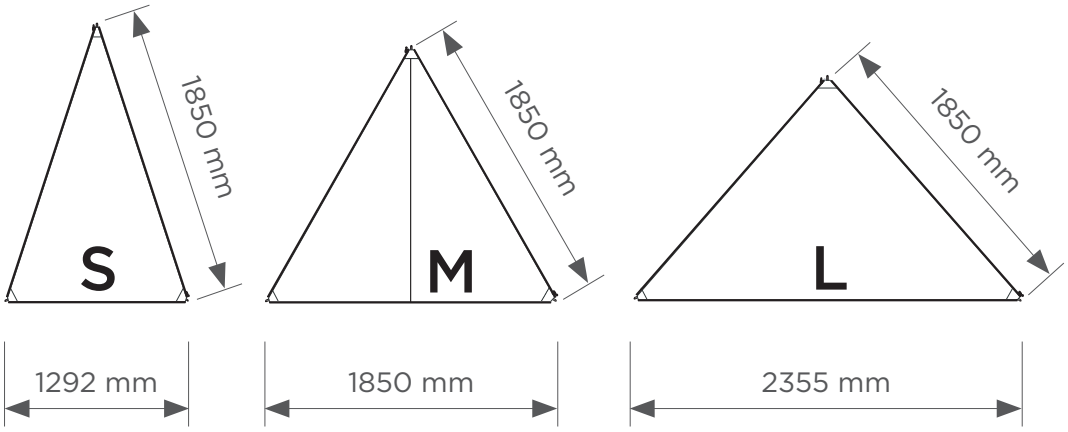

Thule Subsola Side pack - 310213

Content:
2x Thule Subsola Medium Panel
1x Thule Subsola Small Panel
1 x Tension Rafter
1 x Support Pole
Ropes, pegs and a storage bag

Weight:
4.5 kg / 10 lbs

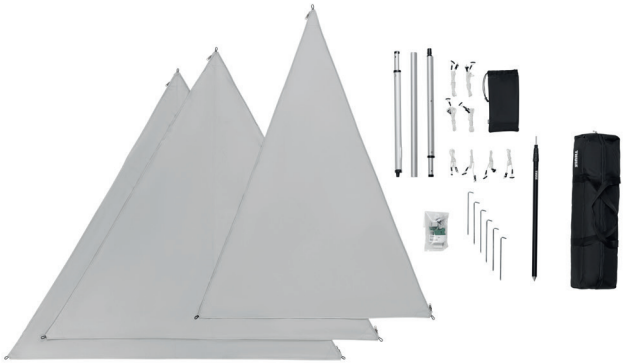

Thule Subsola Front pack - 310215

Content:
1 x Thule Subsola Large Panel
1 x Thule Subsola Medium Panel
1 x Support Pole
Ropes, pegs and a storage bag

Weight:
3 kg / 6.6 lbs

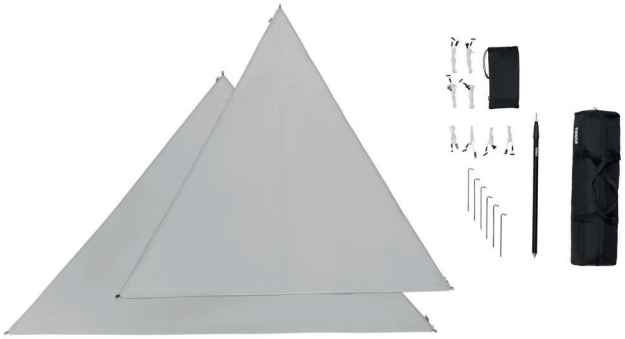

Thule Subsola Medium Panel - 310216

Content:
1x Thule Subsola Medium Panel
Ropes, pegs and a storage bag

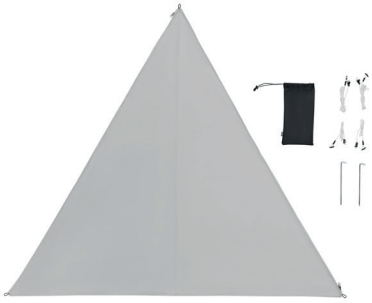

Thule Subsola Support Pole - 310217

Content:
1 x Support Pole
Ropes, pegs and a storage bag

SKU N°		EAN N°
310213	Thule Subsola Side Pack	5415182073011
310215	Thule Subsola Front Pack	5415182073028
310216	Thule Subsola Medium Panel	5415182073035
310217	Thule Subsola Support Pole	5415182073042

Awning Tents

GENERAL INFORMATION	
Awning Tents - Fit Guide	98
Awning Tents - Overview Van & Compact Van	99
Awning Tents - User Manual	100
Awning Tents - General Instructions	100
Awning Tents - Maintenance	101
Awning Tents - Important Safety Instructions	101

AWNING TENTS	
Thule Panorama	102
Thule Residence G3	105
Thule Veduta	108
Thule QuickFit	110

Awning Tents - Fit Guide

	Thule Panorama	Thule Residence G3	Thule Veduta	Thule QuickFit
Stay	Long stay	Long stay	Long stay	Short stay
INSTALLATION				
Motorhome	•	•		•
Caravan	•	• + Eriba Touring	•	•
Van	• Ducato H2	• Ducato H2		• Ducato H2
Compact Van		•		
FITS				
Awnings	5200 • 8000 9200 • 6300 5003 • 5002 5500 • 6200 6002	5200 • 8000 4900 • 5102 9200 • 6300 5003 • 5002 5500 • 6200 6900 • 6002 4200	6300 • 6200	5200 • 8000 4900 • 9200 6300 • 1200 5003 • 5002 5500 • 6200 6900 • 6002 4200 + other brands
Awning lengths	3.00 m - 6.00 m	3.00 m - 6.00 m	4.00 m - 5.00 m	3.00 m - 6.00 m
Mounting height	2.30 m - 2.74 m	2.15 m - 3.10 m	2.45 - 2.59 m	2.25 m - 2.84 m
Vehicle wall	Straight wall Curved wall Ducato	Straight wall Curved wall Ducato & Eriba Touring	Straight wall	Straight wall Curved wall Ducato
SPECIFICATIONS				
Maximum tent length	6.00 m	6.00 m	5.00 m	3.60 m
Fabric	AIRTEX® Fabric	PVC Fabric	AIRTEX® Fabric	RIPSTOP Fabric
Curtains	Optional	Optional	Optional	Included
Windslip	Included	Included (with front panel)	Included	Included
Wheelcover	- Included with Ducato H2 tent model - Optional for other tent models	- Included with fronts of Ducato tent models - Included with Eriba Touring tent model - Optional for other Residence G3 sides or fronts	Optional	Included
Storage bag	2 Luxury bags	2 Luxury bags (included with side panels)	2 Luxury bags	Sport bag

Awning Tents - Overview Van & Compact Van

		Ducato | Jumper | Boxer | Movano >2022 H2			Ducato | Jumper | Boxer | Movano >2022 H2 with lift roof					Ford Transit H3 New			Compact Van	
		L2 (5400)	L3 (6000)	L4 (6400)	L2 (5400)		L3 (6000)		L4 (6400)	L2 (5500)	L3 (6000)	L4 (6700)	VW T5/T6 MB Vito	VW Transporter California
Awnings	Awnings	TO 6300			TO 5200					TO 5200			T 4200	TO 5102
Awnings	Length	3.25 m	3.75 m	4.00 m	3.00 m	3.15 m	3.50 m	3.75 m	4.00 m	3.00 m	3.50 m	4.00 m	2.60	2.60
Awnings	Adapter	301649	301650	301650	308960	301950	308960	301951	301940	302916	302916	302916	301984 (LHD)* 301985 (RHD)* 301978** 301997**	VW Exclusive
Tents	QuickFit	307060												
Tents	Residence G3 Side	310205			310205					310218			310219	301560
Tents	Residence G3 Front	310209	310211	310212	310208	310206	310210	310211	310212	310208	310210	310212		
Tents	Panorama New	307089	307090	307091	310220	310221	310222	310225	310226					

* Adapter for VW T5/T6

**Adapter for Mercedes Benz Vito/V-class

Awning Tents - User Manual

All user manuals are available on our website: **www.thule.com**
> Go to the product page
> Go to "Downloads"

Awning Tents - General Instructions

BEFORE THE INSTALLATION

- The installation instructions are delivered with the tent. Please read them carefully.
  You can also have a look at our installation videos on www.thule.com
- Make sure alle parts are included and check if the delivered tent matches the type, length and mounting height of your awning
- Make sure the vehicle is levelled
- Check if the connections to the vehicle are sufficiently clean. Sand, dust or dirt could cause damage to your vehicle. If you stay for a long period, clean the tent a few times. Apply foil on the vehicle to prevent the connections from scratching the wall
- Check if the channels are clean
- When attaching the positioning pieces in the main housing of the awning, respect the following rules:
  - The surface has to be dry and clean: no dust, no grease !
  - Press well ! Please wait 72 hours before usage !
- To avoid stains, check if there are no trees above the tent that can deposit resin

INSTALLATION

- Open the awning maximum 1 meter before lowering the support legs
- For an easy setup, install the awning tent with 2 people
- Before installing the pegs and pins, close all zippers
- When using pegs and pins, always use a 45° angle when inserting into the ground (see drawing)
- Use pegs and pins depending on the type of soil
- Hammer the peg into the ground before attaching the elastic in order to avoid damaging the elastic

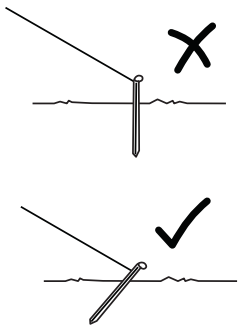

STORAGE

- Make sure not to drag the tent over the ground
- Ensure that there are no hard objects on the windows of the tent during folding, to prevent impressions on them
- Make sure the tent is clean and dry, when being stored for a longer period
- Minimize folding the windows when storing

Awning Tents - Maintenance

- Clean the tent and let dry thoroughly before storage
- Use only water or a dry brush to clean the tent
- Use the Thule PVC Cleaner to clean the PVC fabric of the tent
- Condensation inside the tent is normal. Ventilate the tent adequately

Awning Tents - Important Safety Instructions

- In case of rain, put one awning support leg lower so the water can easily drain off
- When wind reaches 6 Bft. store the tent and close the awning
- Don't place heat sources near the walls or the roof
- Avoid covering the refrigerator grill with the tent
- Use a tension rafter on the awning before tightening the tent completely
- Use a strap kit on the awning after tightening the tent completely

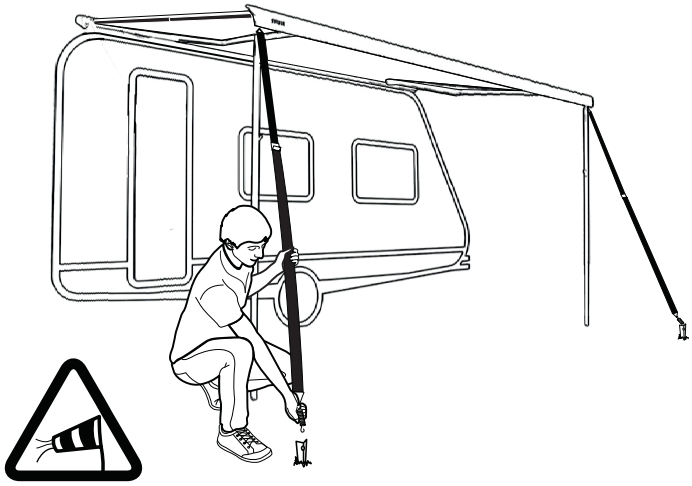

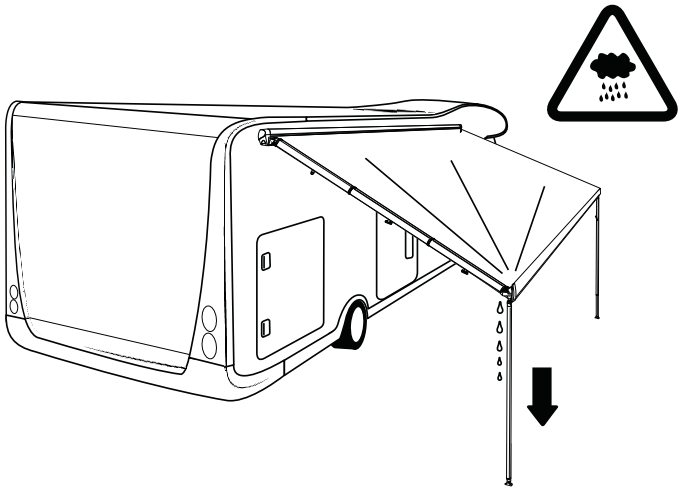

Thule Panorama

INFO

- Length (B) 3.00 m - 6.00 m
- Mounting height (A) 2.30 m - 2.74 m
- Colour Black, silver, white and transparent screen
- Available for Thule Omnistor awnings:
  - 5200, 8000, 9200, 6300, 5003, 6200, 6900
  - 5002*, 5500*, 5800*, 6002, 6802, 6502
  *combined with a transformation kit: ref. 309623
- Only suitable for vehicles with straight walls
- Special model for Thule Omnistor 6300/6200 on Fiat Ducato H2: mounting height 2.30 m - 2.50 m
- Special model for TO 5200 awning on Ducato / Jumper / Boxer / Movano after 2022 H2 van with lift roof
- Net weight:
  - 3.00 m Medium: 29.5 kg
  - 6.00 m X-Large: 35.5 kg

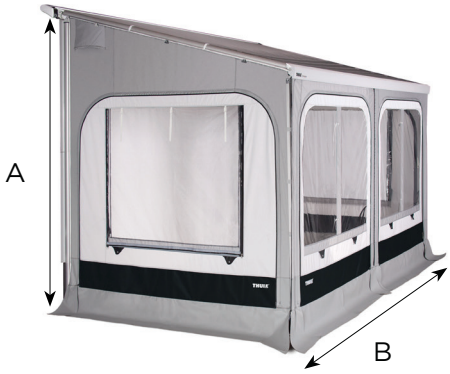

A = distance between bottom of awning's cassette and ground
B = tent length

FEATURES

- Awning tent of high quality material in a timeless design:
  - Special tent fabric: 100% polyester "Airtex"
  - One colour combination fits the various Thule awning fabric finishes
- Easy and user-friendly installation:
  - Each panel has an integrated left and right door
  - Large panoramic windows can be completely removed
  - Side panels are equipped with mosquito mesh which can be closed with transparent windows
  - Permanent aeration on both sides
  - Fully modular system
- High sturdiness and extremely high stability:
  - Clamping profiles to mount the side panels and connect them with the awning fabric for perfect roof sealing
  - Optimal closing due to zipper connecting the front and side panels of the tent
  - A double rubber flap attached to the mast profile ensures full sealing with the vehicle wall
  - A diagonal support between the mast and the clamping profile provides extra sturdiness
- Content:
  - Tent + mounting profiles + connection pieces to the awning
  - Windslip: prevents the wind from entering through the gap below the vehicle
  - Pegs, pins and elastics
  - 1 window tube to open the window (extra tubes can be ordered - 1500600119)
  - Two luxury storage bags from polyester to store the mounting profiles, the tent, pegs, pins, elastics, ...
    - 1 large bag to store the tent: 20 x 30 x 120 cm
    - 1 small bag to store the profiles: 20 x 20 x 130 cm
  - Manual

ACCESSORIES

- Thule Curtains
- Thule Mosquito - Panorama
- Thule Wheelcover
- Thule Hold Down Side Strap Kit
- Thule Tension Rafter G2
- Thule 3rd Support Leg

MODULARITY

FRONT PANEL DESIGN

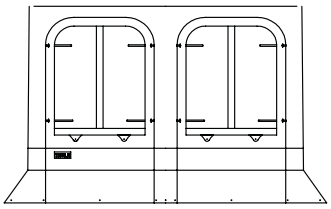

3.00 m

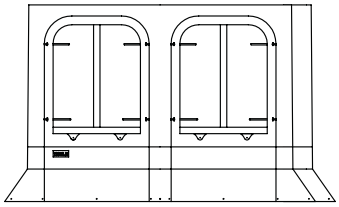

3.25 m

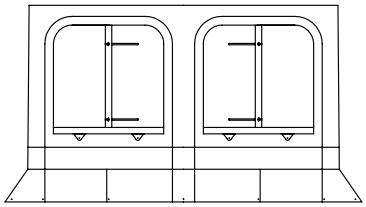

3.50 m

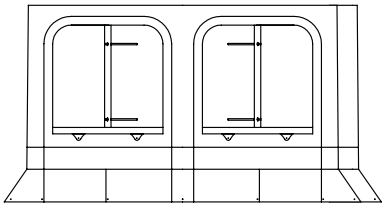

3.75 m

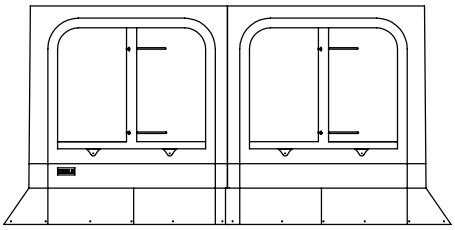

* 4.00 m *

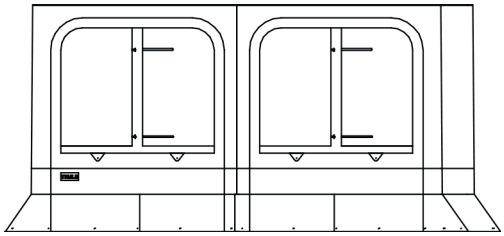

* 4.25 m *

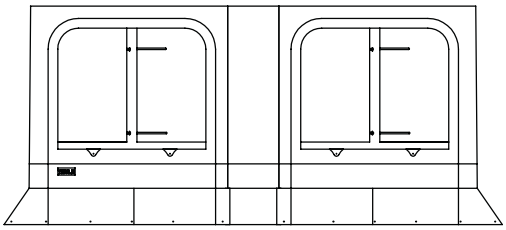

* 4.50 m *

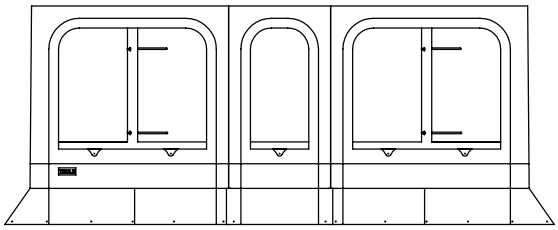

* 5.00 m *

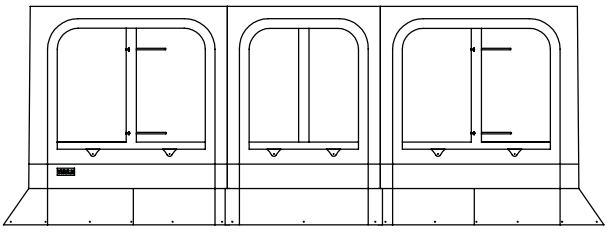

* 5.50 m *

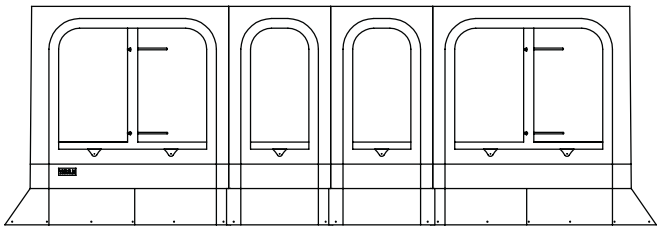

* 6.00 m *

***Front panels replaceable by a mosquito mesh**

THULE PANORAMA - DIMENSIONS		
A - MOUNTING HEIGHT		H
Medium	2.30 m - 2.44 m	± 45 cm
Large	2.45 m - 2.59 m	± 60 cm
X-Large	2.60 m - 2.74 m	± 75 cm
Ducato	2.30 m - 2.50 m	± 45 cm

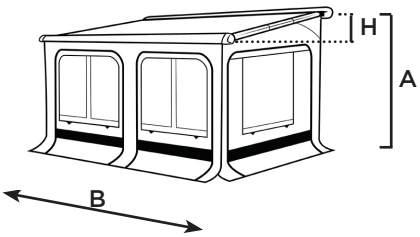

THULE PANORAMA										
AWNING TYPE	A - MOUNTING HEIGHT		LENGTH (B)							
			3.00 m	3.25 m	3.50 m	3.75 m	4.00 m	4.25 m	4.50 m	5.00 m
5200 / 5003	Medium	2.30 m - 2.44 m	301300	-	301301	-	301302	-	301303	301304
	Large	2.45 m - 2.59 m	301305	-	301306	-	301307	-	301308	301309
	X-Large	2.60 m - 2.74 m	-	-	-	-	301310	-	301311	301312
6300 6200 6002	Medium	2.30 m - 2.44 m	306828	306829	306830	306831	306832	308990	306833	301340
	Large	2.45 m - 2.59 m	306834	306835	306836	306837	306838	308991	306839	301341
	X-Large	2.60 m - 2.74 m	-	-	-	-	307087	308992	307088	301342

*For Thule Omnistor 5002/5500 - Order Thule Panorama tent for TO 5003 in combination with transformation kit: 309623

THULE PANORAMA							
AWNING TYPE	A - MOUNTING HEIGHT		LENGTH (B)				
			4.00 m	4.50 m	5.00 m	5.50 m	6.00 m
8000*	Medium	2.30 m - 2.44 m	306818	306819	306820	306821	306822
	Large	2.45 m- 2.59 m	306823	306824	306825	306826	306827
	X-Large	2.60 m - 2.74 m	307092	307093	307094	307095	307096
9200	Medium	2.30 m - 2.44 m	306850	306851	306852	306853	306854
	Large	2.45 m - 2.59 m	306855	306856	306857	306858	306859
	X-Large	2.60 m - 2.74 m	307097	307098	307099	307100	307101

*For Thule Omnistor 5800 - Order Thule Panorama tent for TO 8000 in combination with transformation kit: 309623

THULE PANORAMA - DUCATO H2				
AWNING TYPE	A - MOUNTING HEIGHT	LENGTH (B)		
		3.25 m	3.75 m	4.00 m
5200 6300 6200	2.30 m - 2.50 m	307089	310225	310226

Weight for 3.75 m tent: 22.8 kg

New

THULE PANORAMA - DUCATO / JUMPER / BOXER / MOVANO after 2022 H2 van with lift roof						
AWNING TYPE	A - MOUNTING HEIGHT	LENGTH (B)				
		3.00 m	3.15 m	3.50 m	3.75 m	4.00 m
5200	2.30 m - 2.50 m	310220	310221	310222	310225	310226

Thule Residence G3

INFO

- Length (B) 3.00 m - 6.00 m
- Mounting height (A) 2.15 m - 3.10 m
- Colour Black, grey and white
- Available for Thule Omnistor awnings:
  - 5200, 8000, 4900, 5102, 9200, 6300, 5003, 6200, 6900, 6002, 4200
  - 5002*, 5500*
  *In combination with a transformation kit: ref. 309623
- Only suitable for vehicles with straight walls
- Special models:
  - for Thule Omnistor 5200 Ducato | Jumper | Boxer H2 with Lift Roof
  - for Thule Omnistor 6300 Ducato | Jumper | Boxer H2
  - for Thule Omnistor 5102 on a Volkswagen T5/T6
  - for Thule Omnistor 6300 (3.25 m) on an Eriba Touring
  - for Thule 4200 on a VW T5/T6, MB Vito and Ford Transit Custom Nugget
- Net weight:
  - 3.00 m Medium: 27 kg
  - 6.00 m X-Large: 33.5 kg

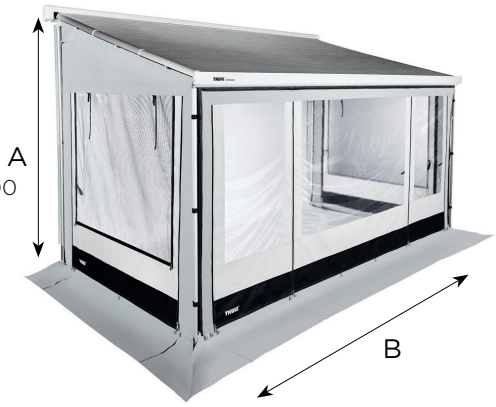

A = distance between bottom of awning's cassette and ground
B = tent length

FEATURES

- Awning tent with a high quality canopy in a timeless design:
  - High quality welded PVC fabric for optimal wind- and watertightness
  - Side panels are equipped with mosquito mesh which can be closed with external transparent blinds
- Easy and user-friendly installation:
  - The side panels are mounted with clamping profiles and the front panel slides into the awning's lead rail
  - Large windows bring in a maximum of light and create a feeling of spaciousness
  - Front panels starting from 3.50 m length have a door opening on both sides and can also be rolled up
  - Front panel can be rolled up completely. The windows in the front cannot be opened
  - Integrated rope attached to the upper side of the front panel to add additional accessories (for example to use a Thule Sun Blocker G2 Front panel)
  - Permanent aeration on both sides
  - Windslip: prevents the wind from entering through the gap below the vehicle
- High sturdiness and extremely high stability:
  - Clamping profiles to mount the side panels and connect them with the awning fabric for perfect roof sealing
  - Optimal closing due to double-shaped profiles (C-profiles) connecting the front and side panels of the tent
  - A double rubber flap attached to the mast profile ensures full sealing with the vehicle wall
  - A diagonal support between the mast and clamping profile provides extra sturdiness
- NOTE: Front and side panels need to be ordered separately
- Content:
  - Side panels: left and right side + mounting profiles + connection pieces to the awning + 2 luxury bags made from polyester fabric to store the mounting profiles, the tent, pegs, pins and elastics, ...
  - Front panel: the complete front panel + pegs and pins + connection profiles (double C-profiles) + windslip + manual

ACCESSORIES

- Thule Curtains
- Thule Wheelcover
- Thule Front Connection Profiles
- Thule Hold Down Side Strap Kit
- Thule Tension Rafter G2
- Thule 3rd Support Leg

FRONT PANEL DESIGN

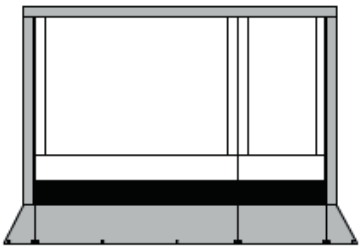

From 3.00 m to 3.25 m

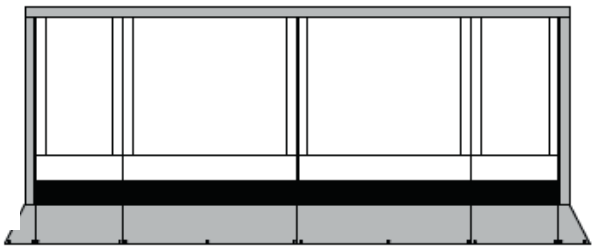

From 5.00 m to 6.00 m

From 3.50 m to 4.50 m

THULE RESIDENCE G3 SIDES - DIMENSIONS			
A - MOUNTING HEIGHT		H	WEIGHT
Small	2.15 m - 2.29 m	± 30 cm	21 kg
Medium	2.30 m - 2.44 m	± 45 cm	22 kg
Large	2.45 m - 2.59 m	± 60 cm	23 kg
X-Large	2.60 m - 2.74 m	± 75 cm	24 kg
XX-Large	2.75 m - 2.89 m	± 75 cm	25 kg
XXX-Large	2.90 m - 3.10 m	± 90 cm	26 kg

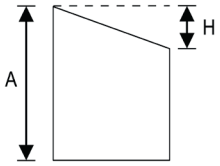

		THULE RESIDENCE G3 - STANDARD SIDES				
		AWNING TYPE				
		5200/5003*/ 4900 / T 4200	8000	6300/6200/ 6002	6900	9200
A - MOUNTING HEIGHT		PROJECTION				
		2.50 m	2.75 m	2.50 m	2.75 m	3.00 m
S	2.15 m - 2.29 m	301500	301513	301520	-	-
M	2.30 m - 2.44 m	301501	301514	301521	301530	301535
L	2.45 m - 2.59 m	301502	301515	301522	301531	301536
XL	2.60 m - 2.74 m	301503	301516	301523	301532	301537
XXL	2.75 m - 2.89 m	301504	301517	301524	301533	301538
XXXL	2.90 m - 3.10 m	301505	301518	301525	301534	301539

*For Thule Omnistor 5002/5500 - Order Thule Residence G3 Sides for TO 5003 in combination with transformation kit: 309623

A - MOUNTING HEIGHT		H	THULE RESIDENCE G3 - SPECIAL SIDES IN COMBINATION WITH XXL/XXXL FRONT		WEIGHT
			AWNING TYPE		
			5200/5003	8000	
			PROJECTION		
			2.50 m	2.75 m	
M	2.30 m - 2.44 m	30 cm	301506	-	22 kg
L	2.45 m - 2.59 m	45 cm	301507	301519	23 kg

	THULE RESIDENCE G3 FRONT - DIMENSIONS		
	A - MOUNTING HEIGHT	HEIGHT	WEIGHT
S / M / L / XL	2.15 m - 2.74 m	2.30 m	5.5 kg - 14.4 kg
XXL / XXXL	2.75 m - 3.10 m	2.45 m	6.5 kg - 15.4 kg

	THULE RESIDENCE G3 - FRONT									
	LENGTH									
	3.00 m	3.25 m	3.50 m	3.75 m	4.00 m	4.25 m	4.50 m	5.00 m	5.50 m	6.00 m
S / M / L / XL (2.15 m - 2.74 m)	301540	301541	301542	301543	301544	301545	301546	301547	301548	301549
XXL / XXXL (2.75 m - 3.10 m)	301550	301551	301552	301553	301554	301555	301556	301557	301558	301559

	THULE RESIDENCE G3 FOR DUCATO | JUMPER | BOXER							
	A - MOUNTING HEIGHT	SIDE PANELS	FRONT PANEL - LENGTH					
			3.00 m	3.15 m	3.25 m	3.50 m	3.75 m	4.00 m
DUCATO H2 (LIFT ROOF) TO 5200	2.30 m - 2.50 m	310205	310208	310206	-	310210	310211	310212
DUCATO H2 TO 6300	2.30 m - 2.50 m	310205	-	-	310209	-	310211	310212

	THULE RESIDENCE G3 FOR FORD TRANSIT H3				
	A - MOUNTING HEIGHT	SIDE PANELS	FRONT PANEL - LENGTH		
			3.00 m	3.50 m	4.00 m
FORD TRANSIT H3	2.30 m - 2.50 m	310218	310208	310210	310212

THULE RESIDENCE G3 - VW TRANSPORTER/CALIFORNIA + THULE OMNISTOR 5102	
301560	Thule Residence G3 - 2.60 m x 2.00 m (21 kg)

THULE RESIDENCE G3 - ERIBA TOURING CARAVAN + THULE OMNISTOR 6300 3.25 m	
301593	Thule Residence G3 - 3.25 m x 2.50 m (25 kg)

New

THULE RESIDENCE G3 - VW T5/T6 & MB VITO - FORD TRANSIT CUSTOM NUGGET - T 4200	
310219	Thule Residence G3 - VW T5/T6 & MB Vito - T 4200 (2.60 m)

Thule Veduta

INFO

- Length (B) 4.00 m - 5.00 m
- Mounting height (A) 2.45 m - 2.59 m (Large)
- Colour Black, silver, white
- Available for Thule Omnistor awnings 6300 and 6200
- Only suitable for caravans
- Net weight: 32 kg for 4.00 m Large model

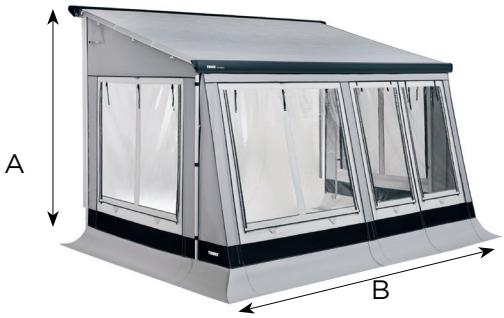

A = distance between bottom of awning's cassette and ground
B = tent length

FEATURES

- Extra space:
  - The sloping front panel offers a large internal living surface and creates a feeling of spaciousness
  - Large panoramic windows
- Awning tent of high quality material in a timeless design:
  - Special tent fabric: 100% polyester "Airtex"
  - One colour combination fits the various Thule awning fabric finishes
- Easy and user-friendly installation:
  - Fully modular system
  - The 4 window panels can be zipped
  - The front panel is easy to install as one complete piece with two or three window panels (see drawing next page)
  - One panel has two integrated door openings and can be placed anywhere you want
  - Integrated rope attached at the uppser side of the front panel to add additional accessories (e.g. to use a Thule Sun Blocker G2 front panel)
  - All panels are equipped with mosquito mesh which can be closed with transparent window covers
  - Permanent aeration on both sides
- High sturdiness and extremely high stability:
  - Clamping profiles to mount the side panels and connect them with the awning fabric for a perfect roof sealing
  - Optimal closing due to the zipper connecting the front and side panels of the tent
  - A double rubber flap attached to the mast profile ensures full sealing with the vehicle wall
  - A diagonal support between the mast and the clamping profile provides extra sturdiness
- Content:
  - Tent + mounting profiles + connection pieces to the awning
  - Windslip: prevents the wind from entering through the gap below the vehicle
  - Wheelcover
  - Pegs, pins and elastics
  - Two luxury storage bags from polyester to store the mounting profiles, the tent, pegs, pins, elastics, ...
  - 1 large bag to store the tent: 20 x 30 x 120 cm
  - 1 small bag to store the profiles: 20 x 20 x 130 cm
  - Manual

ACCESSORIES

- Thule Curtains
- Thule Hold Down Side Strap Kit
- Thule Tension Rafter G2

MODULARITY

FRONT PANEL DESIGN

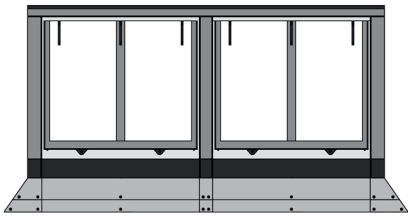

4.00 m

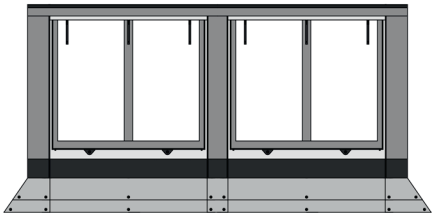

4.25 m

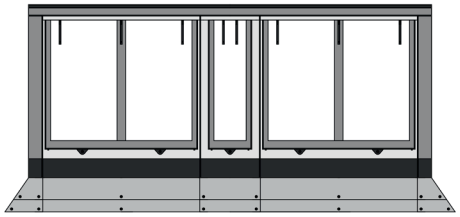

4.50 m

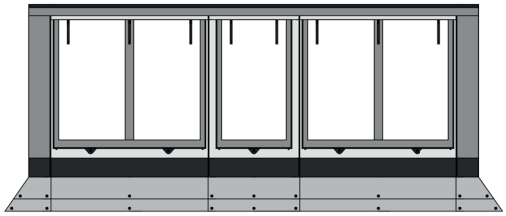

5.00 m

THULE VEDUTA					
AWNING TYPE	MODEL	A - MOUNTING HEIGHT	H	WEIGHT	SKU NO
6300 | 6200	4.00 m Large	2.45 m - 2.59 m	60 cm	32 kg	301350
6300 | 6200	4.25 m Large			32.5 kg	301351
6300 | 6200	4.50 m Large			33 kg	301352
6300 | 6200	5.00 m Large			34 kg	301353

Thule QuickFit

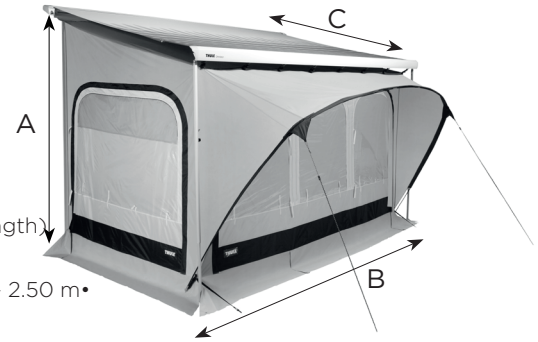

A = Distance between tent rail and the ground
B = Tent length
C = Tent projection

INFO

- Length (B) 2.60 m (for min. 3.00 m awning length)
  3.10 m (for min. 3.50 m awning length)
  3.60 m (for min. 4.00 m awning length)
  3.00 m for Ducato H2 (for min. 3.25 m awning length)
- Mounting height (A) 3 sizes: between 2.25 m - 2.84 m
  1 special mounting height for Ducato H2: 2.30 m - 2.50 m•
  Tent projection (C) 2.25 m (for all awnings with projection 2.50 m)*
  * For awnings with a larger projection, use the Thule Projection Kit: 307052
- Colour Black, grey, white
- Available for Thule Omnistor awnings:
  - 5200, 8000*, 4900, 9200*, 6300, 1200**, 5003, 6200, 6900*, 6002, 6802*, 6502, 5002, 5500, 5800, 4200
  * In combination with the Thule Projection Kit: 307052
  ** Not suitable for 5.00 m and 5.50 m awnings
- Available for various awning brands:
  - Awning with channel lead rail diameter 7 mm: connection pieces included
  - Awning with channel lead rail diameter 5 mm (Fiamma) - use optional kit: 307061
- A caravan rail should be present on the vehicle to install the tent, if not: see Tent Accessories - Installation Kits
- In situations where the support legs touch the windslip, sparepart is optional: 1500602794
- Not for vehicles with curved walls
- Special model for Thule Omnistor 6300/6200 on a Ducato H2 (also < 2007) all lengths:
  3.25 m – 3.50 m – 3.75 m – 4.00 m
- Net weight:
  - 2.60 m Medium: 15.7 kg
  - 3.60 m X-Large: 18.4 kg

FEATURES

- Awning tent with a high quality canopy:
  - Lightweight tent fabric: strong Ripstop polyester, polyurethane coated (5000 mm) for rain protection
  - One colour combination fits the various Thule awning fabric finishes
- Fast and easy setup (see Tent Accessories - Installation Kits):
  - Tent is in one piece and doesn't need additional fixation profiles
  - Fits caravans with a roof-mounted awning: tent slides in the original caravan rail
  - Fits a Ducato H2 van, only with a TO 6300/6200 awning: special model in combination with the optional rail: Thule Awning Fixation Kit TO 6300/6200/9200 - 307050
  - Fits motorhomes with a TO 6300/6200/9200 roof-mounted awning in combination with the optional Thule Awning Fixation Kit TO 6300/6200/9200 - 307050
  - On RV's with all wall-mounted awnings in an optional rail: Thule Universal Tent Fixation Kit - 307205/307206, or for Thule Omnistor 5200 with the Thule Tent LED Mounting Rail TO 5200

- Modularity:
  - Front panel with integrated left and right door opening
  - All panels can be completely removed
  - Large windows
  - Integrated curtains which can be closed with a zipper
  - Side windows are equipped with mosquito mesh and can be closed with a transparent window
  - Double ceiling created by suspending the tent below the awning fabric ensures a better ventilation and insulation
  - Two permanent ventilation openings allow a perfect air circulation when the tent is closed
  - Hook at the centre of the roof to attach a lamp or other accessories - can only be used with a rafter
  - The front canopy is installed with flexible arch tubes to provide additional shade
- Content:
  - Complete tent with tent poles for the canopy + windslip and wheelcover + connection pieces to the awning + pegs, pins and elastics + manual
  - Storage bag: 35 x 35 x 70 cm

ACCESSORIES

- Thule Universal Tent Fixation Kit
- Thule Awning Fixation Kit TO 6300/6200/9200
- Thule Awning Fixation Kit TO 1200
- Thule Awning Fixation Kit Fiamma
- Thule Tent LED Mounting Rail TO 5200
- Thule Tent LED Mounting Rail TO 6300/6200
- Thule Mosquito for QuickFit
- Thule Hold Down Side Strap Kit
- Thule Side Tensioning Kit
- Thule Projection Kit
- Thule Tension Rafter G2
- Thule Mosquito for QuickFit

MODULARITY

INSTALLATION

THULE QUICKFIT				
MODEL	A - MOUNTING HEIGHT	MIN. AWNING LENGTH	WEIGHT	SKU NO
2.60 m Medium	2.25 m - 2.44 m	3.00 m	15.7 kg	307056
3.10 m Medium		3.50 m	16.7 kg	309921
3.60 m Medium		4.00 m	17.7 kg	307058
2.60 m Large	2.45 m - 2.64 m	3.00 m	16.1 kg	307057
3.10 m Large		3.50 m	17.1 kg	309922
3.60 m Large		4.00 m	18.1 kg	307059
2.60 m X-Large	2.65 m - 2.84 m	3.00 m	16.4 kg	309920
3.10 m X-Large		3.50 m	17.4 kg	309923
3.60 m X-Large		4.00 m	18.4 kg	309924
3.00 m Ducato	2.30 m - 2.50 m	3.25 m	16.4 kg	307060

Awning Tent Accessories

INSTALLATION KITS	
INSTALLATION KITS FOR THULE PANORAMA / THULE RESIDENCE G3	
Thule Transformation Kit 5002/5500/5800	114
INSTALLATION KITS FOR THULE QUICKFIT	
Overview	114
Thule Awning Fixation Kit TO 6300/6200/9200	115
Thule Universal Tent Fixation Kit	115
Thule Awning Fixation Kit TO 1200	116
Thule Tent LED Mounting Rail TO 5200	116
Thule Tent LED Mounting Rail TO 6300/6200	117
Thule Awning Fixation Kit Fiamma	117
Thule Side Tensioning Kit	118
Thule Projection Kit	118

AWNING TENT ACCESSORIES	
Thule Curtains	119
Thule Mosquito	119
Thule Windslip	120
Thule Wheelcover	120
Thule Front Connection Profiles	121
Thule Luxury Storage Bags	121
Thule TO 6300 Sealing rope	122

Thule Transformation Kit 5002/5500/5800

INFO

- Only applicable for Thule Panorama and Thule Residence G2 | G3 tents
- This transformation kit provides parts that can change the TO 5003/8000 mounting profiles that are delivered with the tent to the older generation of Thule Omnistor awnings: 5002/5500/5800

309623	Thule Transformation Kit TO 5002/5500/5800

Installation Kits for Thule QuickFit - Overview

	Roof	Wall	Rail
Caravan			
	Original Caravan Rail **All roof awnings** 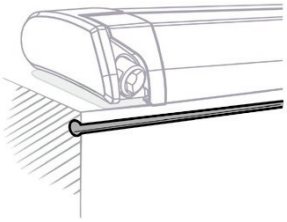	**Thule Universal Tent Fixation Kit** **All wall awnings** 307205 | 307206 	**Thule Awning Fixation Kit TO 1200** **Only TO 1200** 307063 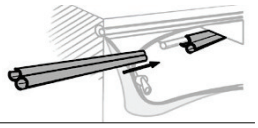
		Thule Tent LED Mounting Rail TO 5200 **Only TO 5200** 3012XX 	**Thule Universal Tent Fixation Kit** **All bag awnings** 307205 | 307206 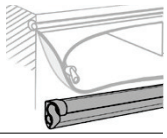
Motorhome - Van			
	Thule Universal Tent Fixation Kit **All roof awnings** 307205 | 307206 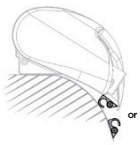 	**Thule Universal Tent Fixation Kit** **All wall awnings** 307205 | 307206 	**A - Mounting height** 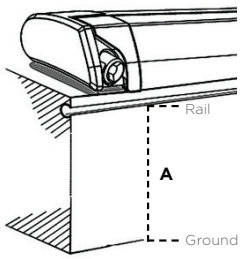
	Thule Awning Fixation Kit TO 6300/6200/9200 **Only TO 6300/6200/9200** 307050 	**Thule Tent LED Mounting Rail TO 5200** **Only TO 5200** 3012XX Not compatible with Thule Adapter Ducato H2 Lift Roof Led (301950-301951-301940) 	
	Thule Tent LED Mounting Rail TO 6300/6200/9200 **Only TO 6300/6200/9200** 301664 		

A = Distance between tent rail and ground

Thule Awning Fixation Kit TO 6300/6200/9200

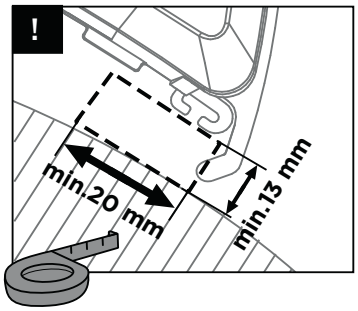

INFO

- This profile makes it possible to mount the Thule QuickFit tent on roof awnings Thule Omnistor 6300/6200/9200
- Profile slides into the opening below the awning's cassette and is glued to prevent sliding
- The total length fits the largest Thule QuickFit tent
- Attention:
  - Cannot be combined with the Thule LED Mounting Rail TO 6300/6200/9200 (306777)
  - Minimum space between awning and vehicle must be provided
- Content:
  - 3 profiles (3x 1.30 m)
  - 2 plastic end caps

307050	Thule Awning Fixation Kit TO 6300/6200/9200

Thule Universal Tent Fixation Kit

INFO

- Universal rail which makes it possible to mount a Thule QuickFit tent on vehicles without a free caravan rail to slide the tent in
- Glued on the awning's cassette or vehicle wall
- Available in 2 colours: white and anthracite
- Content:
  - 1 profile (4.00 m)
  - 2 plastic end caps

307205	Thule Universal Tent Fixation Kit - White
307206	Thule Universal Tent Fixation Kit - Anthracite

Thule Awning Fixation Kit TO 1200

INFO

- This kit makes it possible to mount a Thule QuickFit tent on a Thule Omnistor 1200 bag awning
- Double-shaped PVC profiles to slide over the integrated sinew attached at the inner side of the bag awning
- Fits awning lengths until 4.50 m
- One profile has an open channel and can be used in the middle to go around the tension rafter and to slide a tent into
- Content:
  - 5 profiles (5x 1.00 m)

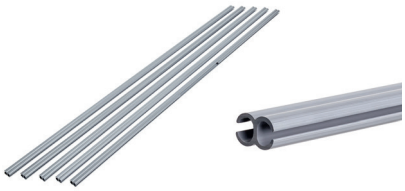

307063	Thule Awning Fixation Kit TO 1200

Thule Tent LED Mounting Rail TO 5200

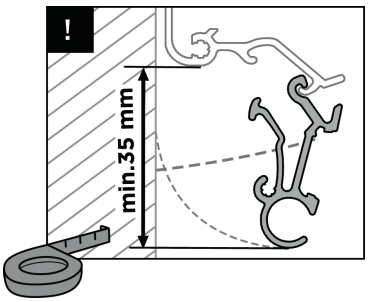

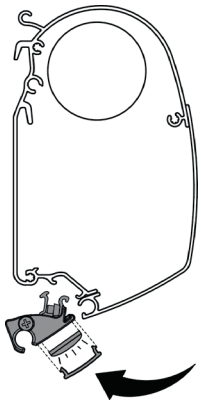

INFO

- This alu profile makes it possible to mount the Thule QuickFit tent on wall awning Thule Omnistor 5200
- The profile is clicked at the bottom of the awning cassette and is fixed with a hex wrench
- It covers the adapters and is provided with a channel to slide the tent in
- Additional space for a Thule LED Strip - to have light on the outside even when the awning is closed
- Available in different lengths and 3 colours: white, anodised and anthracite
- Content:
  - aluminium caravan profile
  - 2 end caps
  - diffuse filter for the LED channel

LENGTH	WEIGHT WITHOUT LED	WEIGHT WITH LED	WHITE	ANODISED	ANTHRACITE
3.00 m	1.2 kg	1.4 kg	301250	301255	301260
3.50 m	1.4 kg	1.6 kg	301251	301256	301261
4.00 m	1.6 kg	1.8 kg	301252	301257	301262
4.50 m	1.8 kg	2 kg	301253	301258	301263
5.00 m	2 kg		301254	301259	301278

RELATED PRODUCT

- Thule LED Strip

Thule Tent LED Mounting Rail TO 6300/6200

INFO

- This caravan profile makes it possible to mount the Thule QuickFit tent on roof awnings
- This caravan profile can be slid at the bottom of roof awnings:
  - Thule Omnistor 6300 | 6200 mounted on a van
  - Thule Omnistor 6300 | 6200 | 9200 mounted on a motorhome, only if you have min. 24 mm depth and min. 17 mm height (see figure)
- Provided with a channel which makes it possible to install a Thule tent or to hang up the Thule Organizers
- Makes it possible to have light on the outside even when the awning is closed
- Fits only with the Thule LED Strip Sideways - not included
- Colour: anthracite
- Content:
  - 3 profiles (3x 1.30 m) to fit a 4.00 m awning length - can be cut to the required length
  - 2 end caps for a perfect finish

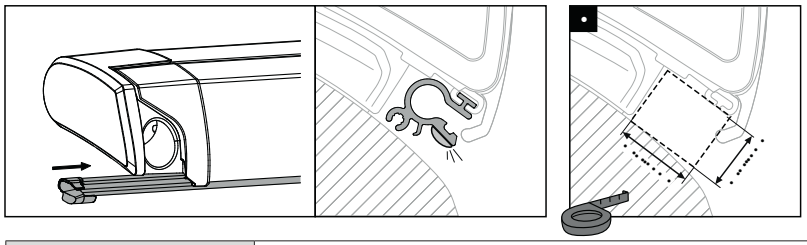

301664	Thule Tent LED Mounting Rail TO 6300/6200

RELATED PRODUCT

- Thule LED Strip Sideways - 301660

Thule Awning Fixation Kit Fiamma

INFO

- This kit makes it possible to mount a Thule QuickFit tent on Fiamma awnings
- Can be used on all tent lengths and secures the tent to the lead rail of the awning
- All Thule Omnistor awnings have a lead rail where the channel has a diameter of 7 mm
- Some other brands have a channel in the lead rail of diameter 5mm, for example Fiamma
- Connection pieces for Thule Omnistor awnings are always provided with the tent
- Content:
  - 8 pieces with sinew 5 mm diameter

307061	Thule Awning Fixation Kit Fiamma

Thule Side Tensioning Kit

INFO

- Set of 2 fiberglass poles to ensure a better sealing of the Thule QuickFit tent with the vehicle wall
- Mounted at each side of the tent to create extra tension
- Length: 2.80 m
- Content:
  - 2 fiberglass poles

307053	Thule Side Tensioning Kit

Thule Projection Kit

INFO

- This kit makes it possible to mount a Thule QuickFit tent on awnings with a projection larger than 2.50 m (2.75 - 3.00 m)
- Content:
  - 8 straps to attach to the existing straps on the tent

307052	Thule Projection Kit 2.75 m - 3.00 m

Thule Curtains

INFO

- Optional for Thule Veduta, Thule Panorama and Thule Residence G2 | G3 tents
- Curtains are made of 80% polyester and 20% cotton
- Available in grey
- The fabric can be ironed and washed at 50°

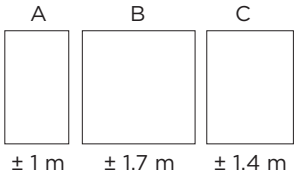

	Set	A	B	C	Tent	Tent length
301563	Set 1	4	2	0	Thule Residence G3	3.00 m - 4.00 m
					Thule Panorama	3.00 m - 4.50 m
301564	Set 2	2	2	2	Thule Residence G3	4.25 m - 5.00 m
301565	Set 3	6	2	0	Thule Residence G3	5.50 m - 6.00 m
					Thule Panorama	5.00 m - 6.00 m
					Thule Veduta	4.00 m - 5.00 m

Thule Mosquito

INFO

- Optional for Thule Panorama and Thule QuickFit awning tents
- Thanks to the modular panels of the Thule Panorama and Thule QuickFit tent, all panels can be unzipped and replaced by a panel made of mosquito mesh for extra ventilation
- Available for the side or the front
- Content:
  - 1 mosquito screen panel for side or front (see overview of Thule Panorama fronts to know which fronts are suitable for a mosquito screen)

THULE PANORAMA	
309930	Thule Mosquito - Side
309931	Thule Mosquito - Front 4.00 m - 6.00 m

THULE QUICKFIT	
309925	Thule Mosquito - QuickFit Side
309926	Thule Mosquito - QuickFit Front 2.60 m
309927	Thule Mosquito - QuickFit Front 3.10 m / Ducato 3.00 m
309928	Thule Mosquito - QuickFit Front 3.60 m

Thule Windslip

INFO

- Included for Thule Veduta, Thule Panorama and Thule Residence G3 tents (with front panel) and optional for Thule Residence G2 tent
- Durable PVC windslip with a sewn kador to close the gap between the vehicle and the ground to prevent the wind from entering
- Can be mounted in the caravan rail or in an optional rail attached to the vehicle wall
- Different lengths available
- Height: 75 cm
- Content:
  - windslip
  - pegs

AWNING TENT LENGTH									
3.00 m	3.25 m	3.50 m	3.75 m	4.00 m	4.25 m	4.50 m	5.00 m	5.50 m	6.00 m
309613	309614	309615	309616	309617	309697	309618	309619	309620	309621

Thule Wheelcover

INFO

- Durable PVC wheelcover to cover your wheel to prevent the wind from entering
- Mounted with push buttons attached to the vehicle

- Thule Veduta: Wheelcover optional
- Thule Panorama:
  - Wheelcover included with Ducato H2 tent model
  - Wheelcover optional for other tent models
- Thule Residence G3
  - Wheelcover included with fronts of Ducato tent models
  - Wheelcover included with Eriba Touring tent model
  - Wheelcover optional for other Residence G3 sides or fronts
- Thule QuickFit
  - Wheelcover included

307397	Thule Wheelcover

Thule Front Connection Profiles

INFO

- Optional for Thule Veduta and Thule Residence G3 tents
- Double-shaped connection profiles to slide in the integrated rope attached at the upper side of the front panel of the tent
- Possible to slide in a Thule Sun Blocker G2 front
- Content:
  - 6 profiles (6 x 1.00 m)

301567	Thule Front Connection Profiles

Thule Luxury Storage Bags

INFO

- Included for Thule Veduta, Thule Panorama and Thule Residence G3 tents
- Two black luxury bags to store the mounting profiles, the tent, pegs and pins, ...
- Made from high quality polyester
- Content:
  - 1 large bag: 20 x 30 x 120 cm (for front and side panels)
  - 1 small bag: 20 x 20 x 130 cm (for mounting profiles and fixation material)

307139	Thule Luxury Storage Bags

Thule TO 6300 Sealing rope

INFO

- Additional seal to prevent rainwater entering the tent along the lead rail
- For Thule Omnistor 6300 roof awning

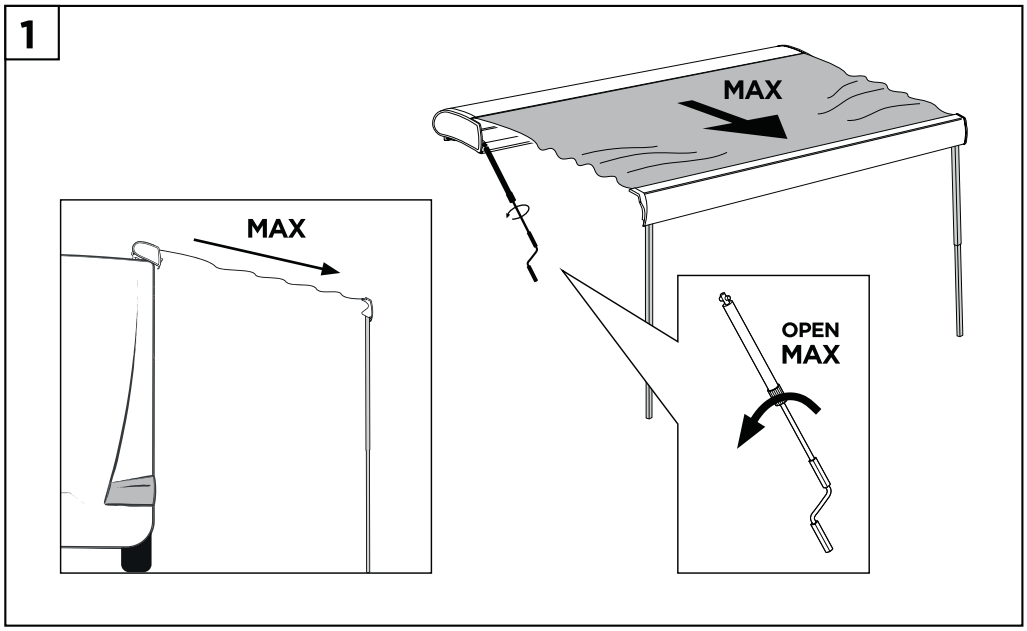

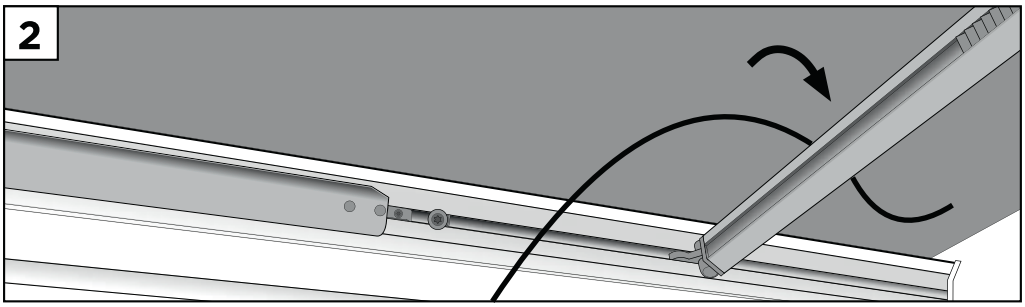

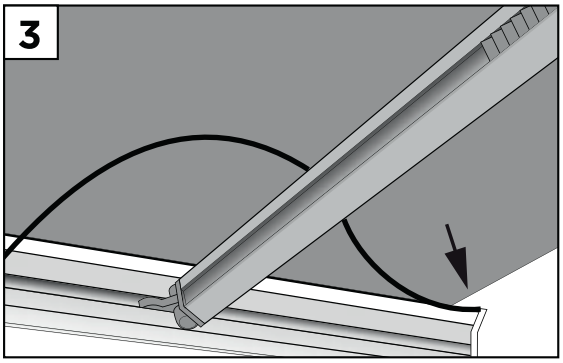

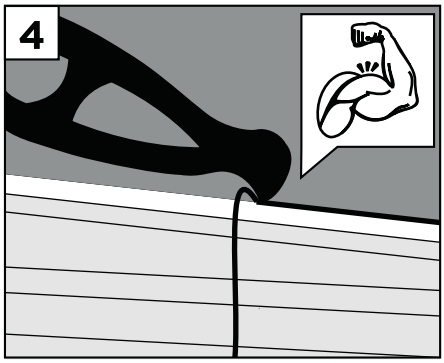

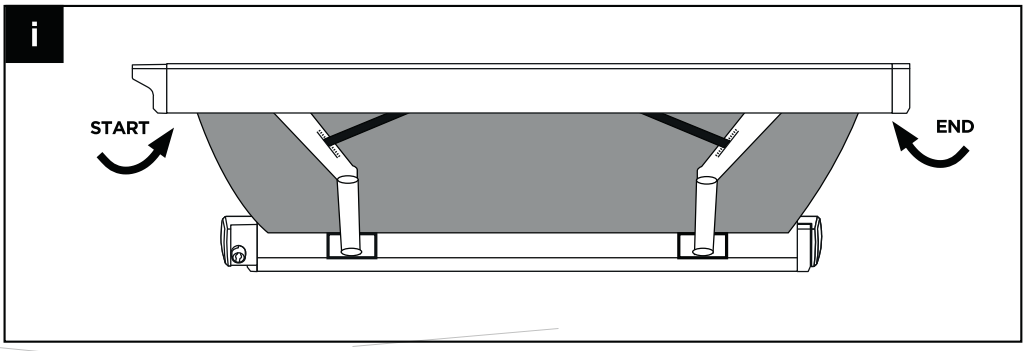

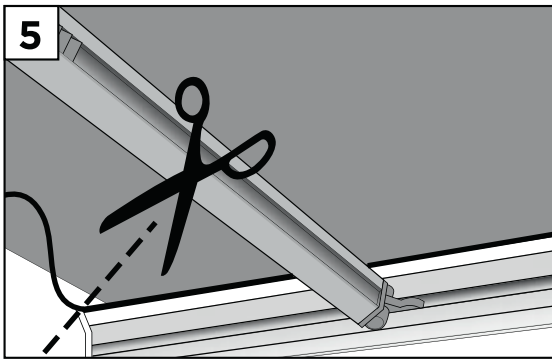

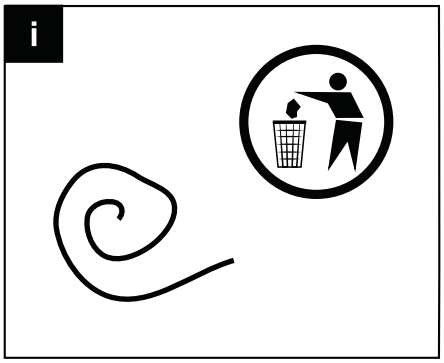

1500603356	Thule TO 6300 Sealing rope

Roof Rack and Ladders

Fit Guide - Roof Rack and Awning Adapter	126
Thule SmartClamp System	128
Thule SmartClamp System for TO 6300 Pack	129
Thule SmartClamp System Short	130
Thule Transformation Kit for SmartClamp System Ducato < 2017	132
Thule Probar Flex	132
Thule Fixpoint Evo	134
Thule Adapter TO 6300/6200 + Sealing Kit for Roof Rack	135
Thule Van Ladder 9 Steps	136
Thule Ladder Fixation Kit	137
Thule Roof Rails	138
Thule Ladder 4 Steps	139
Thule Ladder 5 Steps	139
Thule Ladder 6 Steps	140
Thule Ladder Deluxe 6 Steps	140
Thule Ladder 10 Steps	141
Thule Ladder Deluxe 11 Steps	141

Fit Guide - Roof Rack & Awning Adapter

Checklist:

- My Van is (based on) a H2 Fiat Ducato, Peugeot Boxer or Citroën Jumper
- Model > June 2006
- The roof should be clear of obstacles within 10 cm from the fix points

The size of my van is >

L2H2
Length: 5.4 m / Height: 2.5 m

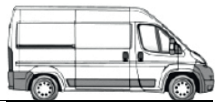

A - I would like an awning

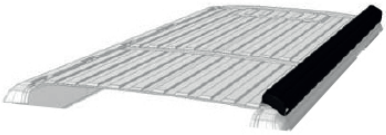

TO 6300 Pack - Colour 1	**302420**
TO 6300 Pack - Colour 2	**302425**
TO 6300 Pack - Colour 3	**302430**
TO 6300 Pack - Colour 4	**302439**

B - I would like a roof rack

Thule SmartClamp System	**301640**
Or in case of obstacles: Thule SmartClamp System Short	**303125**
Thule ProBar Fixpoint Evo (2 pcs)	**Low 303121**

C - I would like an awning and a roof rack

Step 1: Choose your awning (see A)	
Step 2: Order Thule SmartClamp System for TO 6300 Pack	**301643**
or (in case of obstacles): Thule SmartClamp System Short	**303125**
Step 3: Choose load bars: High or Low (2 pcs)	**Low 303121**

D - I have an awning (1) and would like to expand with a roof rack

Thule SmartClamp System	**301643 (2)**
Or in case of obstacles: Thule SmartClamp System Short	**303125**
Thule ProBar Fixpoint Evo	**Low 303121**

(1) only compatible with Thule Omnistor Roof Awnings
(2) for older Thule Ducato adapters (two-piece adapter) also order Thule Transformation Kit for Thule SmartClamp System Ducato < 2017 - **301646**

E - I have a roof rack and would like to expand with an awning

Awning **Thule Omnistor 6300 3.25 m** + adapter **301651**

In case of Thule SmartClamp System Short: See A

Awning colour 1:

Awning cassette: **Anodised**
Caps: **Black**
Fabric: **Mystic Grey 31**

Awning colour 2:

Awning cassette: **Anodised**
Caps: **Grey**
Fabric: **Mystic Grey 31**

Awning colour 3:

Awning cassette: **Anthracite**
Caps: **Black**
Fabric: **Mystic Grey 31**

Thule ProBar Fixpoint Evo - High

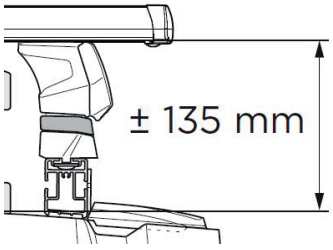

Thule ProBar Fixpoint Evo - Low

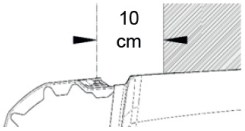

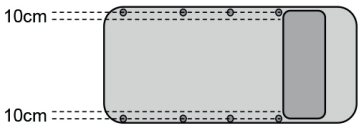

L3H2

Length: 6.0 m / Height: 2.5 m

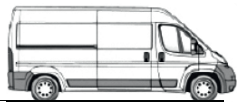

TO 6300 Pack - Colour 1	**302421**
TO 6300 Pack - Colour 2	**302426**
TO 6300 Pack - Colour 3	**302431**
TO 6300 Pack - Colour 4	**302440**
Thule SmartClamp System	**301641**
Or in case of obstacles: Thule SmartClamp System Short	**303125**
Thule ProBar Fixpoint Evo (2 pcs)	**Low 303121**

Step 1: Choose your awning (see A)	
Step 2: Order Thule SmartClamp System for TO 6300 Pack	**301644**
or (in case of obstacles): Thule SmartClamp System Short	**303125**
Step 3: Choose load bars: High or Low (2 pcs)	**Low 303121**

Thule SmartClamp System	**301643 (2)**
Or in case of obstacles: Thule SmartClamp System Short	**303125**
Thule ProBar Fixpoint Evo	**Low 303121**

(1) only compatible with Thule Omnistor Roof Awnings
(2) for older Thule Ducato adapters (two-piece adapter) also order Thule Transformation Kit for Thule SmartClamp System Ducato < 2017 - **301646**

Awning **Thule Omnistor 6300 3.75 m** + adapter **301652**

In case of Thule SmartClamp System Short: See A

L4H2

Length: 6.4 m / Height: 2.5 m

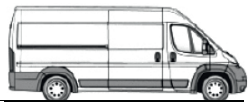

TO 6300 Pack - Colour 1	**302422**
TO 6300 Pack - Colour 2	**302427**
TO 6300 Pack - Colour 3	**302432**
TO 6300 Pack - Colour 4	**302441**
Thule SmartClamp System	**301642**
Or in case of obstacles: Thule SmartClamp System Short	**303125**
Thule ProBar Fixpoint Evo (2 pcs)	**Low 303121**

Step 1: Choose your awning (see A)	
Step 2: Order Thule SmartClamp System for TO 6300 Pack	**301645**
or (in case of obstacles): Thule SmartClamp System Short	**303125**
Step 3: Choose load bars: High or Low (2 pcs)	**Low 303121**

Thule SmartClamp System	**301643 (2)**
Or in case of obstacles: Thule SmartClamp System Short	**303125**
Thule ProBar Fixpoint Evo	**Low 303121**

(1) only compatible with Thule Omnistor Roof Awnings
(2) for older Thule Ducato adapters (two-piece adapter) also order Thule Transformation Kit for Thule SmartClamp System Ducato < 2017 - **301646**

Awning **Thule Omnistor 6300 4.00 m** + adapter **301652**

In case of Thule SmartClamp System Short: See A

Awning colour 4

Awning cassette: **White**
Caps: **White**
Fabric: **Mystic Grey 31**

LOAD INFO
- Maximum load: 75 kg per set of 2 load bars
- L2H2: maximum total load 150 kg
- L3H2: maximum total load 200 kg
- L4H2: maximum total load 200 kg
- Short: maximum total load 100 kg

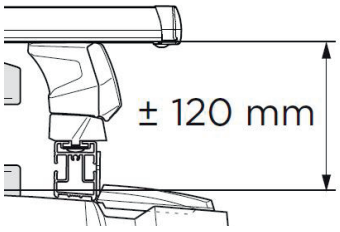

Thule SmartClamp System

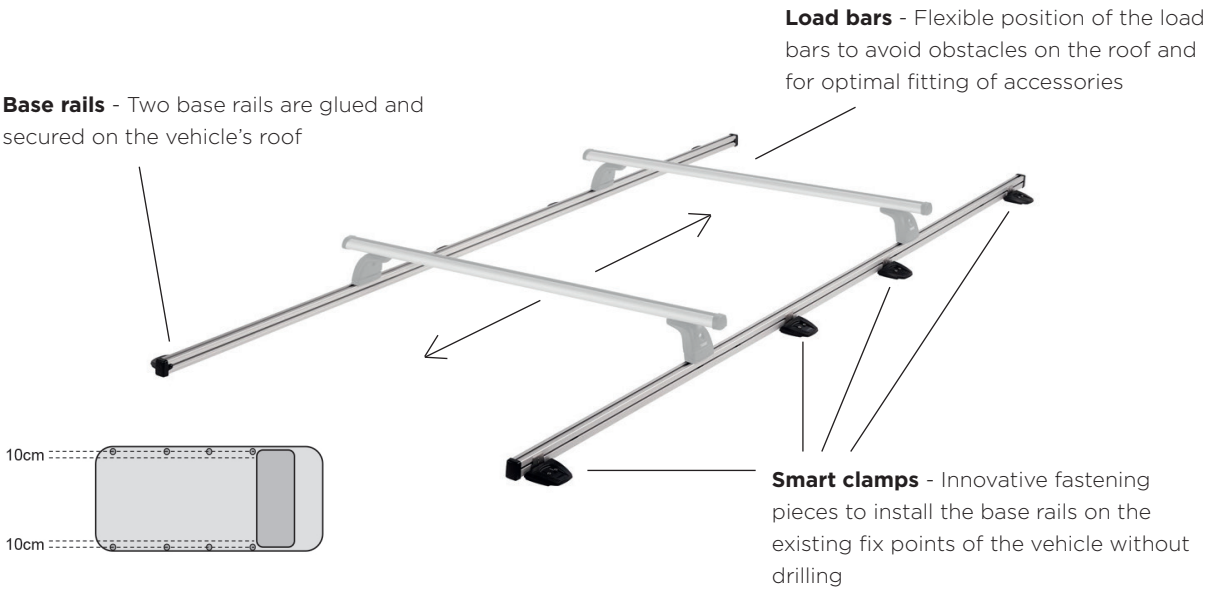

INFO

- Easy installation without drilling by mounting the smart clamps to the van's existing fix points
- Base rails are glued onto the vehicle roof and connected to the smart clamps
- Possible to expand the roof rack with a Thule awning, retrofit installation possible (301651/301652)

FEATURES

- Suitable for H2 Fiat Ducato, Peugeot Boxer and Citroën Jumper vans from 2007 onwards
- Van roof should be clear of obstacles within 10 cm of the fix points
- Option to add two or more load bars to allow fitting of roof accessories such as roof boxes and carriers for sports gear (needs to be bought separately)
- Various lengths available for various vehicle models
- Content set:
  - **L2H2** (301640) 2x base rails of 2.83 m (left/right) + 6x smart clamps + fixation material
  - **L3H2** (301641) 2x base rails of 3.44 m (left/right) + 8x smart clamps + fixation material
  - **L4H2** (301642) 2x base rails of 3.78 m (left/right) + 8x smart clamps + fixation material

MODEL	VEHICLE SIZE	MAX. LOAD ROOF RACK	AWNING LENGTH
Fiat Ducato Peugeot Boxer Citroën Jumper	L2H2 (L 5.4 m - H 2.5 m)	150 kg	3.25 m
	L3H2 (L 6.0 m - H 2.5 m)	200 kg	3.75 m
	L4H2 (L 6.4 m - H 2.5 m)	200 kg	4.00 m

301640	Thule SmartClamp System - L2H2	Weight: 9 kg
301641	Thule SmartClamp System - L3H2	Weight: 11 kg
301642	Thule SmartClamp System - L4H2	Weight: 12 kg

Thule SmartClamp System for TO 6300 Pack

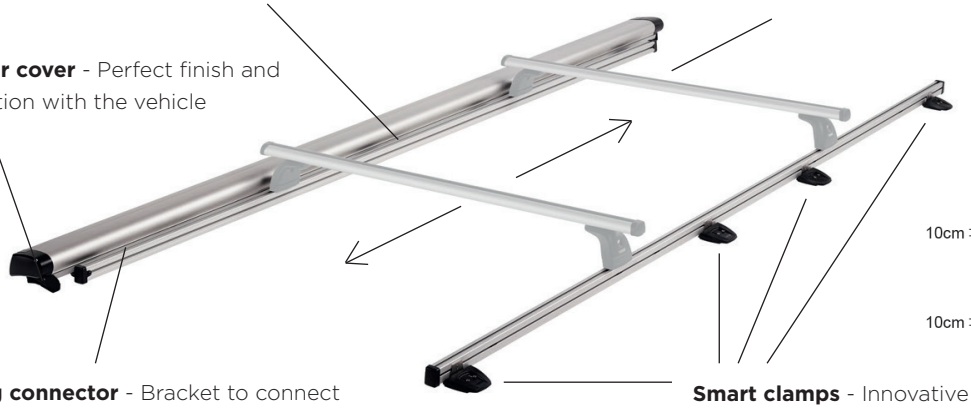

Base rails - Two base rails are glued and secured on the vehicle roof

Load bars - Flexible position of the load bars to avoid obstacles on the roof and for optimal fitting of accessories

Adapter cover - Perfect finish and integration with the vehicle

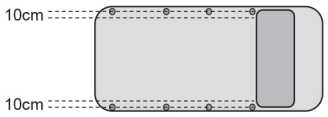

Awning connector - Bracket to connect the base rails to the awning adapter

Smart clamps - Innovative fastening pieces to install the base rails on the existing fix points of the vehicle without drilling

INFO

- Mounting set if roof rack is bought in combination with the TO 6300 Pack
- Easy installation without drilling by mounting the smart clamps to the van's existing fix points and awning connector to the awning adapter
- Base rails are glued onto the vehicle roof and connected to the smart clamps

FEATURES

- Suitable for H2 Fiat Ducato, Peugeot Boxer and Citroën Jumper vans from 2007 onwards
- Van roof should be clear of obstacles within 10 cm of the fix points
- Compatible with the Thule Omnistor 6300 Pack (needs to be bought separately)
- Compatible with a Thule awning, mounted with the Thule Ducato adapter > 2017 (301649/301650)
- Compatible with older Thule Ducato adapters (2-pieces) with the Thule Transformation Kit for Thule SmartClamp System Ducato < 2017 (301646)
- Option to add two or more load bars to allow fitting of roof accessories such as roof boxes and carriers for sportsgear (need to be bought separately)
- Various lengths available for various vehicle models
- Content set:
  - **L2H2** (301643) 2x base rails of 2.83 m (left/right) + 3x smart clamps + 3x awning connectors + fixation material
  - **L3H2** (301644) 2x base rails of 3.44 m (left/right) + 4x smart clamps + 4x awning connectors + fixation material
  - **L4H2** (301645) 2x base rails of 3.78 m (left/right) + 4x smart clamps + 4x awning connectors + fixation material

MODEL	VEHICLE SIZE	MAX. LOAD ROOF RACK	AWNING LENGTH
Fiat Ducato Peugeot Boxer Citroën Jumper	L2H2 (L 5.4 m - H 2.5 m)	150 kg	3.25 m
	L3H2 (L 6.0 m - H 2.5 m)	200 kg	3.75 m
	L4H2 (L 6.4 m - H 2.5 m)	200 kg	4.00 m

301643	Thule SmartClamp System for TO 6300 Pack - L2H2	Weight: 9 kg
301644	Thule SmartClamp System for TO 6300 Pack - L3H2	Weight: 11 kg
301645	Thule SmartClamp System for TO 6300 Pack - L4H2	Weight: 12 kg
301646	Thule Transformation Kit for Thule SmartClamp System Ducato < 2017	Weight: 0.5 kg

Thule SmartClamp System Short

INFO

- Flexible roof rack solution for vans with accessories within 10 cm of the side installed on the roof
- Fit roof bar accessories and carriers for sports gear on your roof (sold separately)
- Suitable for Ducato | Jumper | Boxer | Movano ≥ 2022 H2
- Carry loads up to 100 kg on your roof
- Easy installation without drilling by mounting the smart clamps on 4 of the van's existing fix points
- Important: The van roof should be clear of obstacles within 10 cm of the sides where the rails will be installed
- Compatible with the Thule Omnistor 6300 Pack (sold separately)
- Compatible with a Thule awning, mounted with the Thule Ducato adapter > 2017 (301649/301650)
- The set contains:
  - 2 x Base rails of 1.64 m
  - 4 x SmartClamps
  - 2 x Awning connection plates
  - Fixation material

303125	Thule SmartClamp System Short

Ducato | Jumper | Boxer | Movano ≥ 2022 H2

	L2 (5400) 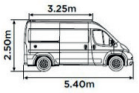		L3 (6000) 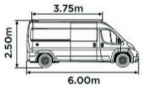		L4 (6400) 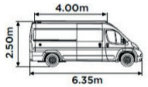	
	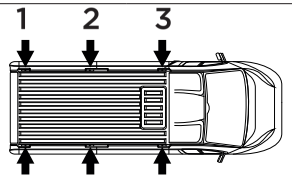		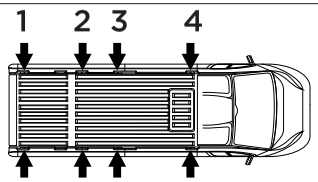		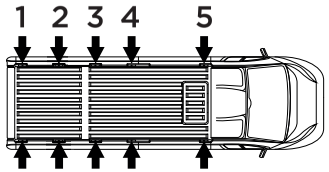	
	No awning installed	Awning installed	No awning installed	Awning installed	No awning installed	Awning installed
New **4 point system - max. 100 kg (2 x Thule ProBar)**	303125 Fixation on fix points row: 1 + 2 2 + 3		303125 Fixation on fix points row: 1 + 2 3 + 4		303125 Fixation on fix points row: 1 + 3 2 + 4 4 + 5	
6 point system - max. 150 kg (4 x Thule ProBar)	301640 Fixation on fix points row: 1 + 2 + 3	301643 Fixation on fix points row: 1 + 2 + 3	301640 Fixation on fix points row: 1 + 2 + 3 2 + 3 + 4	301643 Fixation on fix points row: 1 + 2 + 3 2 + 3 + 4	301640 Fixation on fix points row: 1 + 3 + 4 3 + 4 + 5	301643 Fixation on fix points row: 1 + 3 + 4 3 + 4 + 5
8 point system - max. 200 kg (6 x Thule ProBar)			301641 Fixation on fix points row: 1 + 2 + 3 + 4	301644 Fixation on fix points row: 1 + 2 + 3 + 4	301642 Fixation on fix points row: 1 + 3 + 4 + 5	301645 Fixation on fix points row: 1 + 3 + 4 + 5

Thule Tranformation Kit for Thule SmartClamp System Ducato < 2017

INFO

- When you already have an awning installed and would like to expand it with a roof rack
- Permits you to fit the Thule SmartClamp System to an older Ducato two-piece awning adapter
- Weight: 0.5 kg

RELATED PRODUCT

- Thule SmartClamp System for TO 6300 Pack

301646	Thule Tranformation Kit for Thule SmartClamp System Ducato < 2017

Thule ProBar Flex

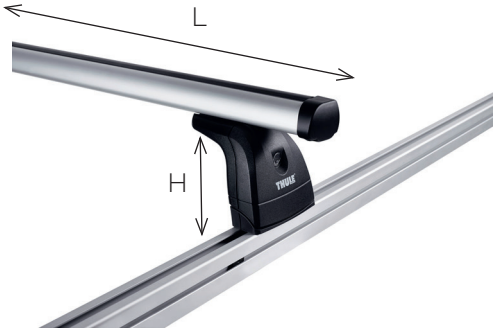

Thule ProBar Flex - High
301647

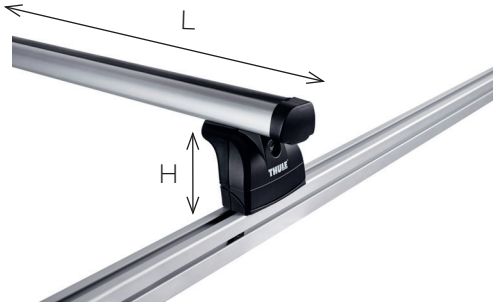

Thule ProBar Flex - Low
301648

INFO

- Compatible with the Thule SmartClamp System on the vehicle roof
- Flexible position of the load bars on the base rails to avoid obstacles on the roof
- Fits all Thule roof accessories and carriers compatible with the Thule ProBar
- Optional Thule Van Ladder 9 Steps to provide easy access to roof rack and roof-mounted accessories
- The load bars can be locked with a key to prevent theft

LOAD BARS	HEIGHT (H)	LENGTH (L)	WEIGHT	MAX. LOADING WEIGHT
High	13 cm	1.50 m	8.3 kg per set	75 kg per set
Low	10 cm	1.50 m	7.9 kg per set	75 kg per set

FEATURES

- Available in two heights
- Thule ProBar Flex - High: approx. 13 cm above roof center
- Thule ProBar Flex - Low: approx. 10 cm above roof center
- Length: 1.50 m
- Maximum load of 75 kg per set of load bars
- Content:
  - 2x Thule ProBar + sealing rubber
  - 4x feet
  - 4x locks with 2 keys
  - fixation material
  - manual

301647	Thule ProBar Flex - High (2 pcs)
301648	Thule ProBar Flex - Low (2 pcs)

NOTE - Thule ProBar Flex - Low is not compatible with the Thule Hullavator Pro

RELATED PRODUCTS

- Thule SmartClamp System
- Thule SmartClamp System for TO 6300 Pack
- Thule Van Ladder 9 Steps

ACCESSORIES

NOTE - Fits all Thule roof accessories and carriers compatible with the Thule ProBar load bars

- Thule Force XT
- Thule Canyon XT
- Thule Hullavator Pro
- Thule Hull-a-Port Aero
- Thule Portage
- Thule Sailboard Rack
- Thule SUP Taxi XT
- Thule Multipurpose Rack
- Thule SnowPack
- Thule SkiClick
- ... See www.thule.com

Thule ProBar Fixpoint Evo

INFO

- Easy to install roof bar set
- Removable system
- Contemporary design update
- Easy to (un)install roof bar set
- Max. load: 75 kg per set of 2 load bars
- Ergonomic torque limiter key indicates when the rack is safely and properly secured to your vehicle
- Secured with Thule One-key locks (included)
- Add the 30 mm extension kit for even more elevation in case of collision with roof windows or solar panels
- ProBars and feet can easily be removed while the remaining kit can be covered with an aesthetic cover to keep the same position for your next trip
- All-in-one pack (see content below)
- The set contains:
  - 2 x Thule ProBar 1.50 m
  - 4 x Fixpoint Evo Foot
  - 4 x Fixpoint Evo Kit
  - 4 x Fixpoint Evo Kit Cover
  - 1 x Torque Key
  - 1 x One-key Lock Set (4pcs)

Thule ProBar Fixpoint Evo Low

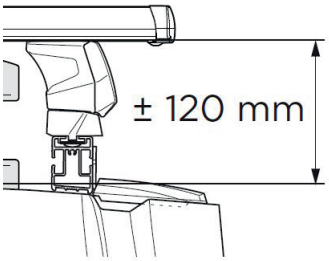

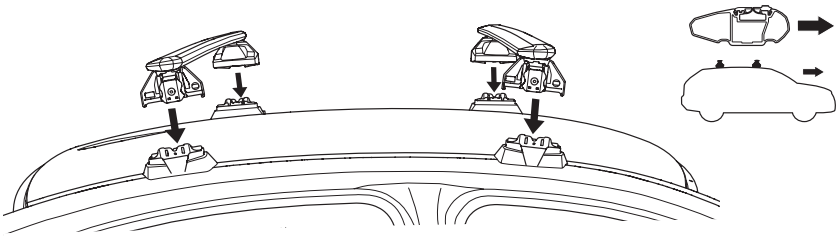

303121	Thule ProBar Fixpoint Evo Low for SmartClamp System | California
303124	Thule ProBar Fixpoint Evo for Ford Transit H3
303127	Thule ProBar Fixpoint Evo Extra-High Extension Kit 30 mm
710750	Thule Kit Cover

Instruction video:

Thule Adapter TO 6300/6200 + Sealing Kit for Roof Rack

INFO

- Mounting kit for Thule SmartClamp System
- Adapter set + EPDM sealing + covers
- Not compatible with SmartClamp System Short

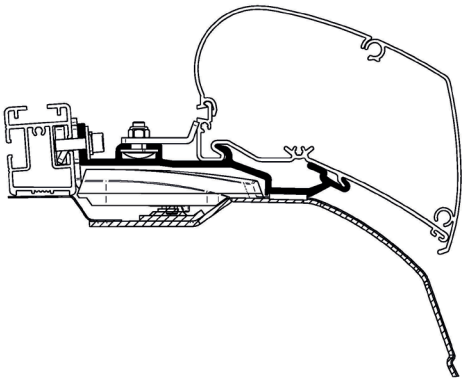

301651	Thule Adapter TO 6300/6200 + Sealing Kit for Roof Rack | Ducato L2H2
301652	Thule Adapter TO 6300/6200 + Sealing Kit for Roof Rack | Ducato L3H2 / L4H2

Thule Van Ladder 9 Steps

INFO

- Quick and easy access to roof rack and roof-mounted accessories
- Can easily be fastened to the vehicle wall with extra stability thanks to the included magnetic fixation kit
- Safe and stable on most terrains
- Air pressure system for safe closing
- The Thule Ladder Fixation Kit can also be used to fasten a windscreen or to hang up organizers
- Storage bags included

FEATURES

- Complies with EN-131
- 9 steps, extendable to 2.60 m
- Open partly for lower reach
- Max. weight support: 150 kg
- Max. load for organizers: 10 kg
- Dimensions: closed LxWxH: 49 x 7 x 75 cm - open LxWxH: 49 x 7 x 264 cm
- Weight ladder: 8.1 kg
- Weight fixation kit: 1.2 kg
- Packaging size LxWxH: 65 x 13 x 80 cm
- Content:
  - Thule Van Ladder 9 Steps
  - Thule Ladder Fixation Kit
  - 4 protection patches
  - 2 protection caps
  - 2 organizer fixation parts
  - Storage bag for ladder
  - Storage bag for fixation kit with safe protection for magnetic field

301404	Thule Van Ladder 9 Steps

Thule Ladder Fixation Kit

INFO

- Easy to both apply on and remove from steel surfaces (for the magnetic connection a steel surface is required)
- Multi-purpose use for telescopic ladder, organizers and windscreen
- Quick and easy fixation of a telescopic ladder thanks to the pump buckle tensioning system
- Easily attach the Thule Windscreen to the vehicle side without drilling
- Easy to mount the Thule Organizers on various positions on the vehicle sides thanks to the integrated rail

FEATURES

- Max. load for organizers: 10 kg
- Dimensions LxWxH: 66 x 10 x 8 cm
- Weight fixation kit: 1.2 kg
- Packaging size LxWxH: 15 x 15 x 73 cm
- Content:
  - Thule Ladder Fixation Kit
  - 4 protection patches
  - 2 organizer fixation parts
  - Storage bag for fixation kit with safe protection for magnetic field

301405	Thule Ladder Fixation Kit

Thule Roof Rails

INFO

- Standard length 3 meters
- Easily adjustable to required length
- Optional: set of 2 accompanying cross rails in aluminium with a standard length of 2.50 m
- Loading capacity: 70 kg

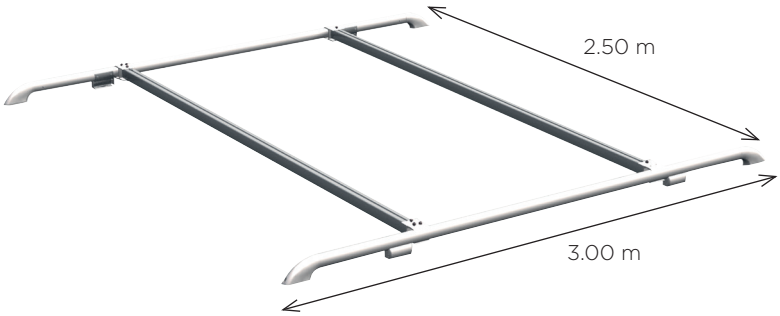

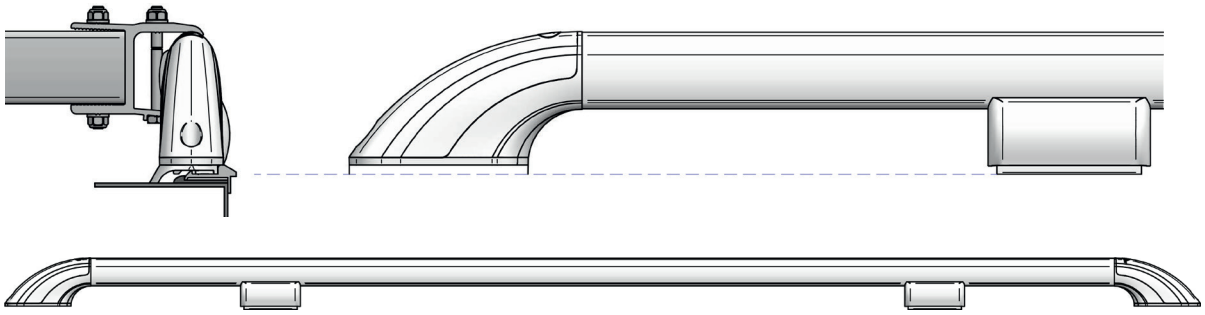

307511	Thule Roof Rails Deluxe - White lacquered (2 pcs)
307516	Thule Roof Rails Deluxe - Aluminium (2 pcs)
307499	Thule Cross Rails for Roof Rails (2 pcs)

Thule Ladder 4 Steps

INFO
- 4 steps
- Backside mounting on a van
- Material: anodised aluminium
- Stainless steel fastening components
- Extra light and robust

307490	Thule Ladder 4 Steps

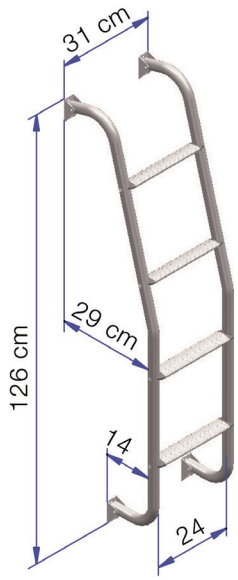

Thule Ladder 5 Steps

INFO
- 5 steps
- For indoor use
- Material: anodised aluminium
- Stainless steel fastening components
- Extra light and robust

307492	Thule Ladder 5 Steps

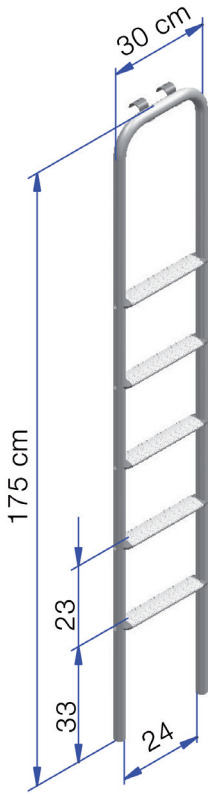

Thule Ladder 6 Steps

INFO
- 6 steps
- Backside mounting
- Material: anodised aluminium
- Stainless steel fastening components
- Extra light and robust

307487	Thule Ladder 6 Steps

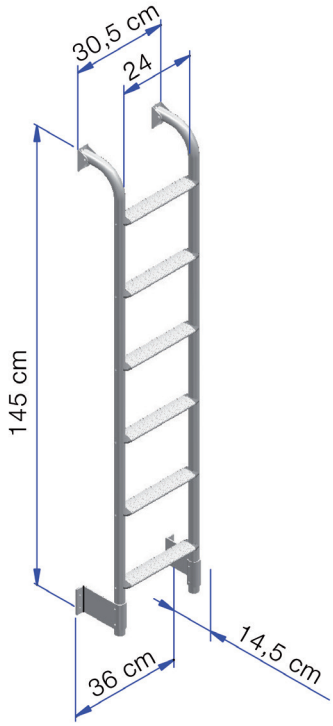

Thule Ladder Deluxe 6 Steps

INFO
- 6 steps
- Backside mounting
- Material: lacquered aluminium
- Stainless steel fastening components
- Extra light and robust

307496	Thule Ladder Deluxe 6 Steps

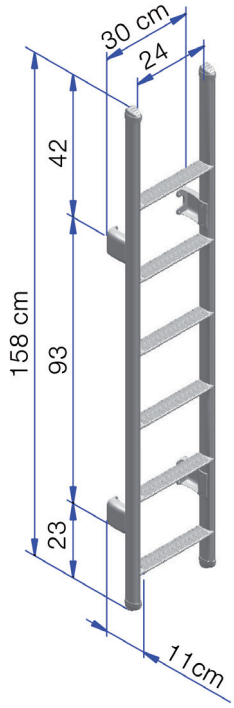

Thule Ladder 10 Steps

INFO
- 10 steps
- Backside mounting
- Foldable
- Material: anodised aluminium
- Stainless steel fastening components
- Extra light and robust

307488	Thule Ladder 10 Steps

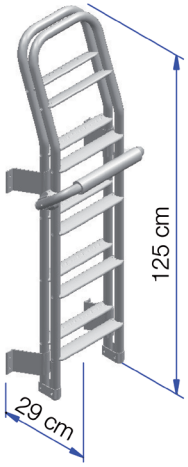

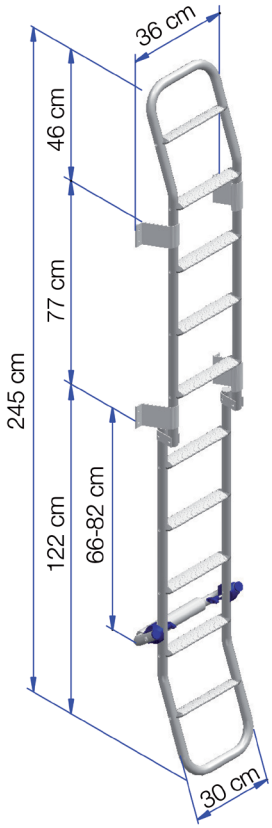

Thule Ladder Deluxe 11 Steps

INFO
- 11 steps
- Backside mounting
- Foldable
- Material: lacquered aluminium
- Stainless steel fastening components
- Extra light and robust

307497	Thule Ladder Deluxe 11 Steps

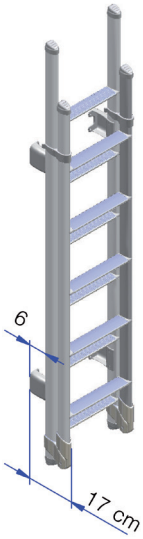

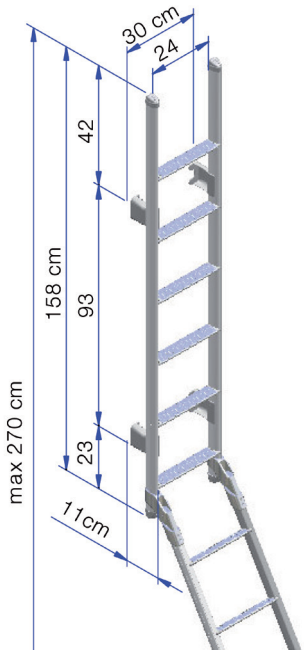

Thule VeloSwing

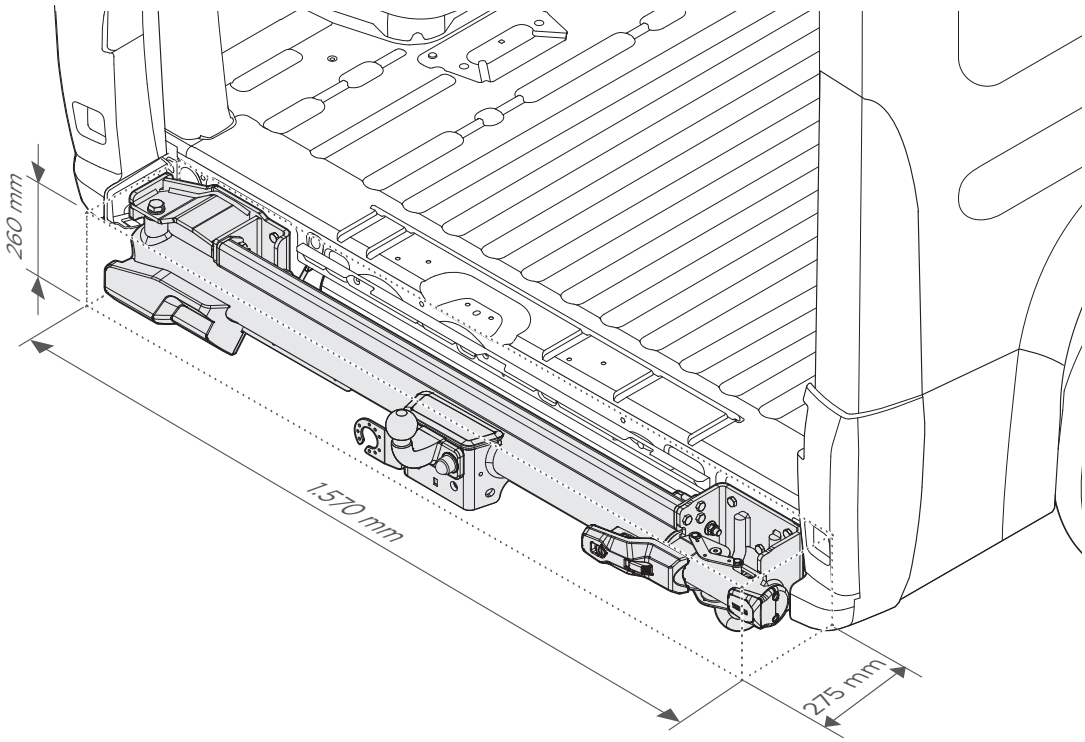

INFO

Dimensions (WxLxH)	157 x 26 x 27.5 cm 62 x 10.2 x 10.8 in
Weight	53 kg (additional net weight of 46 kg after installation) 117 lbs (additional net weight of 101 lbs after installation)
Max. tow capacity	3000 kg / 6614 lbs (depending on vehicle's towing capacity)
Max. vertical load	150 kg / 231 lbs (depending on vehicle's towing capacity)
Opening range	90°
Vehicle Compatibility	Fiat Ducato from 2007 onwards Peugeot Boxer from 2007 onwards Citroën Jumper from 2007 onwards Opel Movano from 2022 onwards
Packaging (WxLxH)	31.5 x 137 x 27.5 cm 12.4 x 53.9 x 10.8 in

USPs

- Chassis-mounted carrier
- Full access to your rear door
- Load any towbar-mounted bike carrier or any towbar cargo box you want
- Tow heavy trailers, boats and more

SPECIFICATIONS

- Easily swings aside to provide access to the back of your van without the need to remove your bikes or other accessories
- Easy to operate with color indicator on the permanent safety lock that lets you know when you have successfully locked it in place
- You can use the same towbar bike rack or cargo box on your RV and your everyday car
- The Thule VeloSwing functions as a certified towbar, allowing you to tow trailers or other towbar accessories up to 3000 kg (depending on the vehicle's loading capacity)
- A pre-cut bumper (sold separately) ensures an integrated look with the rest of the van
- Developed especially for Fiat Ducato, Peugeot Boxer, Citroën Jumper from 2007 onwards and the Opel Movano from 2022 onwards

SKU N°		EAN N°
302064	Thule VeloSwing	5415182073349
302065	Thule VeloSwing Bumper	5415182073356
302066	Thule VeloSwing Bumper | Parking Sensors	5415182073363
302075	Thule VeloSwing Wiring Kit > 2011 (13 pin)	5415182073912
302076	Thule VeloSwing Wiring Kit < 2011 (13 pin)	5415182073929

Bike Racks

GENERAL INFORMATION	
Bike Racks - Fit Guide	146
How to install a Thule Bike Rack	150
Overview installation dimensions	151
General safety instructions	152
Quality	153
Security	153

BIKE RACKS FOR REAR WALL	
Thule Lift V16 (Manual - 12V)	154
Thule Excellent (Standard - Short)	156
Thule Elite G2 (Standard - Short - Hymer Hooks)	158
Thule Elite G2 One Bike	160
Thule Sport G2 (Standard - Short - Tour - Hobby - Universal)	162
Thule Essential (Standard - Short)	166

BIKE RACKS FOR GARAGE	
Thule VeloSlide (Standard - Short)	168
Thule Sport G2 Garage	170

BIKE RACKS FOR A-FRAME	
Fit Guide	172
Thule Caravan Superb (Standard - Short)	174
Thule Caravan Superb XT - Black (Standard - Short)	176
Thule Caravan Smart	178
Thule Caravan Light	180

BIKE RACKS FOR VAN REAR DOOR	
Thule WanderWay	183
Thule Elite Van XT (Anodised - Black)	184
Thule Sport G2 Compact	187

Bike Racks - Fit Guide

	Thule Lift V16 Manual	Thule Lift V16 12V motor	Thule Excellent Standard Anodised Black	Thule Excellent Short	Thule Elite G2 Standard	Thule Elite G2 Short	Thule Elite G2 One Bike
Product N°	307368	307369	Ano: 309821 Black: 302033	309822	306560	306561	302047
Motorhome	•	•	•	•	•	•	•
Caravan rear	•	•	•	•	•	•	•
Caravan A-frame							
Van							
Compact Van							
Standard number of bikes	2	2	2	2	2	2	1
Max. number of bikes (optional)	3	3	4	4	4	4	1
Max. loading weight	50 kg	50 kg	60 kg	60 kg	60 kg	60 kg	30 kg
Max. bike weight	30 kg	30 kg	30 kg	30 kg	30 kg	30 kg	30 kg
Max. tire width	2.75" / 70 mm	2.75" / 70 mm	2.75" / 70 mm	2.75" / 70 mm	2.75" / 70 mm	2.75" / 70 mm	2.75" / 70 mm
Suitable for e-bikes	•	•	•	•	•	•	•
Sliding rails left - right			•	•	•	•	•
Sliding rails in depth			•	•			
Lockable platform	manual	manual	automatic	automatic	manual	manual	manual
Bike holders	integrated locks	integrated locks	integrated locks	integrated locks	integrated locks	integrated locks	integrated locks
Weight	17 kg	18.1 kg	10.6 kg	10.6 kg	10.1 kg	9.5 kg	6.7 kg

Bike Racks - Fit Guide

	Thule Sport G2 Standard	Thule Sport G2 Short	Thule Sport G2 Tour	Thule Sport G2 Hobby	Thule Sport G2 Universal	Thule Essential Standard	Thule Essential Short
Product N°	307126	307127	306572	307128	306563	309825	309826
Motorhome	•	•	•			•	•
Caravan rear	•	•	•	•	•	•	•
Caravan A-frame							
Van							
Compact Van							
Standard number of bikes	2	2	2	2	2	2	2
Max. number of bikes (optional)	3	3	3	3	2	3	3
Max. loading weight	50 kg	50 kg	50 kg	50 kg	38 kg	50 kg	50 kg
Max. bike weight	19 kg	19 kg	19 kg	19 kg	19 kg	19 kg	19 kg
Max. tire width	2.1" / 53 mm	2.1" / 53 mm	2.1" / 53 mm	2.1" / 53 mm	2.1" / 53 mm	2.1" / 53 mm	2.1" / 53 mm
Suitable for e-bikes							
Sliding rails left - right	•	•	•	•	•	•	•
Sliding rails in depth							
Lockable platform	manual	manual	manual	manual	manual	manual	manual
Bike holders	optional locks	optional locks	optional locks	optional locks	optional locks	optional locks	optional locks
Weight	8.2 kg	7.9 kg	6.8 kg	6.8 kg	8 kg	7.9 kg	7.1 kg

Bike Racks - Fit Guide

	Thule VeloSlide Standard	Thule VeloSlide Short	Thule Sport G2 Garage	Thule Caravan Superb Standard	Thule Caravan Superb Short	Thule Caravan Superb XT Black Standard	Thule Caravan Superb XT Black Short
Product N°	302014	302044	306574	307130	307329	302031	302030
Motorhome	•	•	•				
Caravan rear							
Caravan A-frame				•	•	•	•
Van		•					
Compact Van							
Standard number of bikes	2	2	2	2	2	2	2
Max. number of bikes (optional)	2	2	4	3	2	3	2
Max. loading weight	70 kg	70 kg	50 kg	60 kg	60 kg	60 kg	60 kg
Max. bike weight	35 kg	35 kg	19 kg	30 kg	30 kg	30 kg	30 kg
Max. tire width	5” / 127 mm	5” / 127 mm	2.1” / 53 mm	2.1” / 53 mm	2.1” / 53 mm	2.75” / 70 mm	2.75” / 70 mm
Suitable for e-bikes	•	•		•	•	•	•
Sliding rails left - right			•				
Sliding rails in depth							
Lockable platform	automatic	automatic		manual	manual	manual	manual
Bike holders	optional locks	optional locks	optional locks	integrated locks	integrated locks	integrated locks	integrated locks
Weight	20.9 kg	19.9 kg	5.6 kg	9.7 kg	9.6 kg	10 kg	9.9 kg

Bike Racks - Fit Guide

	Thule Caravan Smart	Thule Caravan Light	Thule WanderWay VW T6	Thule Elite Van XT Anodised - Black Du/Ju/Bo > 2007	Thule Elite Van XT Black VW Crafter > 2017	Thule Elite Van XT Black Sprinter > 2006 VW Crafter < 2017	Thule Elite Van XT Black Ford Transit H3	Thule Sport G2 Compact
Product N°	307129	306598	911001	Ano: 307340 Black: 302013	302018	302043	302067	307341
Motorhome								
Caravan rear								
Caravan A-frame	•	•						
Van				•	•	•	•	•
Compact Van			•					
Standard number of bikes	2	2	2	2	2	2	2	2
Max. number of bikes (optional)	2	2	4	2	2	2	2	2
Max. loading weight	50 kg	40 kg	60 kg	35 kg	35 kg	35 kg	35 kg	35 kg
Max. bike weight	30 kg	20 kg	30 kg	19 kg	19 kg	19 kg	19 kg	19 kg
Max. tire width	2.1" / 53 mm	2.1" / 53 mm	3" / 76 mm	2.75" / 70 mm	2.75" / 70 mm	2.75" / 70 mm	2.75" / 70 mm	2.1" / 53 mm
Suitable for e-bikes	•		•					
Sliding rails left - right			•					
Sliding rails in depth								
Lockable platform	manual	n.a.	n.a.	manual	manual	manual	manual	manual
Bike holders	integrated locks	straps	integrated locks	integrated locks	integrated locks	integrated locks	integrated locks	optional locks
Weight	8.9 kg	4.7 kg	13.9 kg	10.5 kg	10.5 kg	10.5 kg	10.5 kg	7.2 kg

How to install a Thule Bike Rack

Instructions for the installation of a rear-mounted bike rack with extra tension: to avoid rattling during travel.

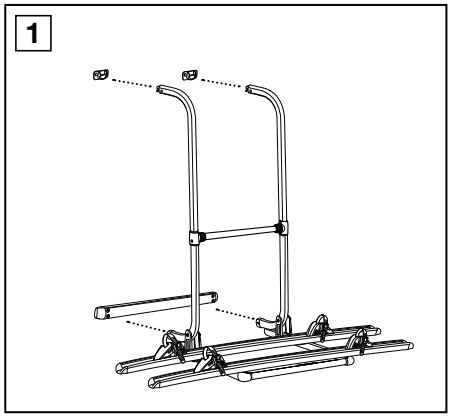

1. Unpack the bike rack, prepare the base frame for installation. Indicate the position of the fixation points on the vehicle wall. Attach the fixation points on the wall.

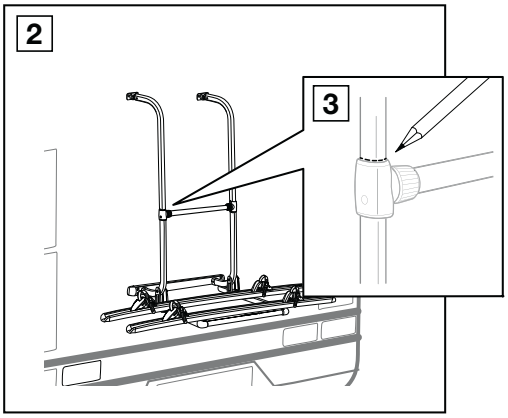

2. Adhere the bike rack to the wall.

3. Indicate the position of the telescopic arms.

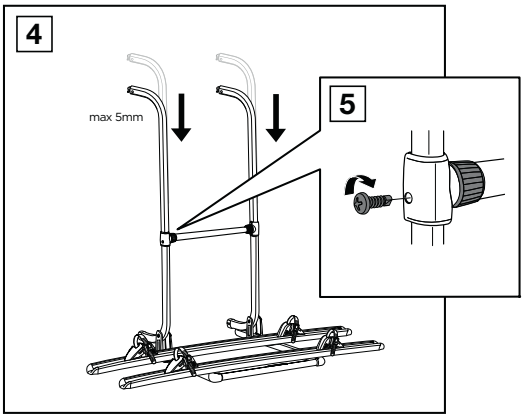

4. Detach the bike rack from the vehicle. Move the telescopic arms downwards by approximately 3 to 5 mm.

5. Fix the telescopic arms with screws.

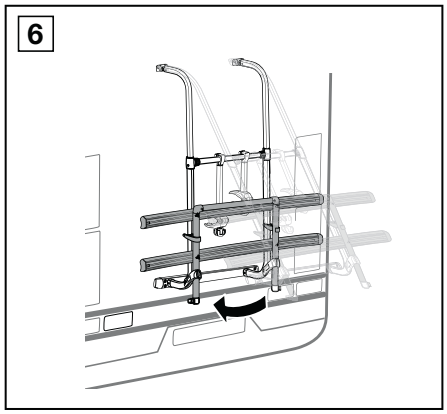

6. Adhere the bike rack and fix it with bolts. Complete the installation.

Overview installation dimensions

PRODUCT	SKU NO	A	B
Thule Lift V16 manual	307368	600 mm	700-950 mm
Thule Lift V16 12V motor	307369	600 mm	700-950 mm
Thule Excellent Standard	309821	600 mm	800-1500 mm
Thule Excellent Standard Black	302033	600 mm	800-1500 mm
Thule Excellent Short	309822	600 mm	600-800 mm
Thule Elite G2 Standard	306560	600 mm	800-1500 mm
Thule Elite G2 Short	306561	600 mm	500-800 mm
Thule Elite G2 HH	306562	600 mm	800-1500 mm
Thule Elite G2 One Bike	302047	600 mm	800-1500 mm
Thule Sport G2 Standard	307126	600 mm	800-1500 mm
Thule Sport G2 Short	307127	600 mm	400-700 mm
Thule Sport G2 Tour	306572	600 mm	800-1500 mm
Thule Sport G2 Hobby	307128	600 mm (rail)	880-1370 mm
Thule Sport G2 Universal	306563	800 mm	1350-1750 mm
Thule Essential Standard	309825	600 mm	800-1500 mm
Thule Essential Short	309826	600 mm	400-700 mm
Thule Sport G2 Garage	306574	n.a.	n.a.
Thule Elite Van XT	307340	n.a.	1180 mm
	302013	n.a.	1180 mm
	302018	n.a.	1180 mm
	302043	n.a.	1180 mm
Thule Sport G2 Compact	307341	550 mm	800-1500 mm

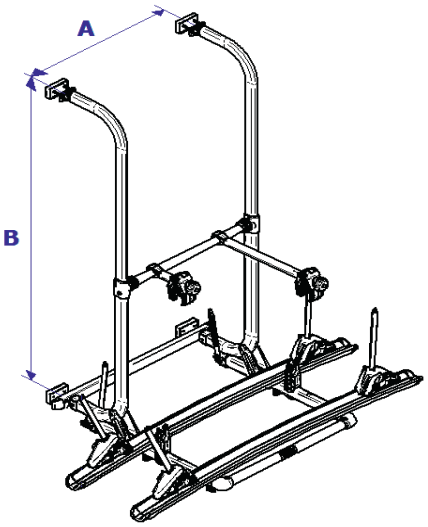

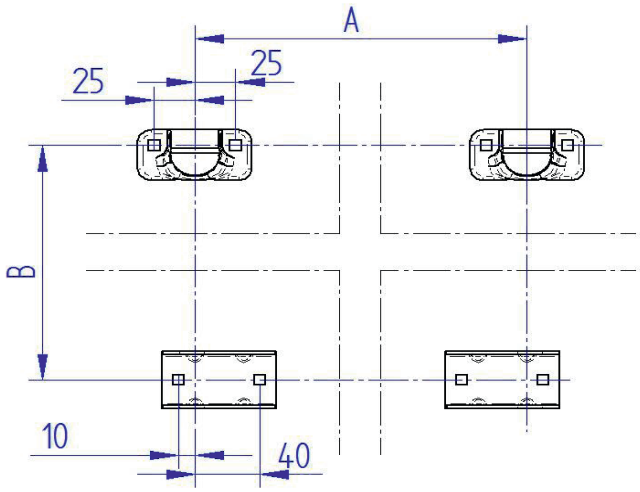

For mounting rails the horizontal dimensions are variable.

Thule Top Mounting Rail	309828
Thule Bottom Mounting Rail	306946
Thule Bottom Mounting Rail without counter plates	308954

General Safety Instructions

1. Thule absolves itself of responsibility for any personal injuries or consequential damage to property or wealth caused by incorrect fitting or usage.

2. The bike rack must be assembled and fitted securely in accordance with the instructions.

3. Firstly, make sure the wall - where the bike rack is to be placed - is solid. If not, please reinforce.

4. The bike rack or the transported goods must not cover the vehicle's rear light.

5. The vehicle's driver is solely responsible for ensuring the products are is in faultless state and that both the rack and load are securely fastened.

6. Always put the biggest/heaviest bike first and closest to the car. Then position the smaller/lighter bike.

7. Before departure all loose parts should be detached from the bikes, such as childseats, baskets, locks and cycle pumps etc. The bikes should never contain loose items during transport as these could cause danger to others.

8. Always fasten all bikes to the bike rack frame by means of the included long strap.

9. Make sure that belts and other fasteners are secure. Retighten if necessary.

10. The vehicle's total length increases when the bike rack is attached. The bikes themselves may increase the vehicle's total width and height. Special care has to be taken when reversing and/or entering garages, ferries etc.

11. Immediately replace any damaged or worn parts.

12. The car's on-road behaviour may change especially when making turns and during braking when the bike rack is installed on the vehicle.

13. Applicable speed limits and other traffic regulations must always be respected.

14. Speed should always be adjusted to suit safety considerations with regard to traffic conditions and the load being carried.

15. If projecting more than 40cm beyond the outer edge of the light emitting surface of the clearance resp. position lamps of the rear mounted carrier, the load shall be provided to the front with a white lamp at the side, not more than 40 cm from its edge and not more than 1.5m above the lane. A red lamp shall be visible towards the rear.

16. For vehicles first type-approved after 1 October 1998, the rear-mounted carrier or the transported goods are not allowed to cover the vehicle's third brake light (ISO). The vehicle's brakelight shall be visible from the left and the right sides as follows: relative to the vehicles longitudinal axis at a 10 degree horizontal angle, upwards; relative to the upper edge of the lamp – at a 10 degree vertical angle downwards, relatively to the lower edge of the lamp at a 5 degree vertical angle. If these requirements are not met, an optional replacement brake light shall be fitted (Not applicable for roof mounted bike racks).

17. The rack is constructed to carry standard-bike-frames. Tandem bikes must not be carried.

18. Modifications to this product are strictly prohibited.

19. Clean the bike rack regularly, using warm water or car schampoo. Especially when used in coastal areas (salt-water-sand) or during times when salt is being used on the roads.

20. Make sure the bike rack is still securely fitted after driving a short distance (50 km) and thereafter at regular intervals.

21. Keep the instructions safely in the car.

Quality

Thule - A leading brand in bike racks for years.

Thule Test Center™
Thule Test Program™ as part of the development process. Products go through extreme testing before they can obtain the Thule logo.

Security

Thule One-Key System

- Install or replace all lock cylinders on your Thule products and use the same key for all of them
- Available in packs of 4, 6, 8 , 12 or 16 lock cylinders

450400	Thule One-Key System 4-pack
450600	Thule One-Key System 6-pack
450800	Thule One-Key System 8-pack
451200	Thule One-Key System 12-pack
451600	Thule One-Key System 16-pack

Thule Lift V16

INFO

Thule Lift V16 - Manual

- 2 bikes, extendable to 3
- Weight 17 kg
- Max. loading weight 50 kg
- Max. bike weight 30 kg
- Rail distance 15 cm
- For vertical walls between 70-95 cm
- Suitable for e-bikes

Thule Lift V16 - Motor 12V

- 2 bikes, extendable to 3
- Weight 18.1 kg
- Max. loading weight 50 kg
- Max. bike weight 30 kg
- Rail distance 15 cm
- For vertical walls between 70-95 cm
- Suitable for e-bikes

FEATURES

- 2 versions available: with hand crank or with 12V motor
- Recommended for vertical motorhomes or caravan walls
- The motor enables you to lower the platform in only 40 seconds
- The hand crank allows you to lower the platform manually
- The platform can bridge a distance of 70 cm in height
- The lowest position of the platform allows you to easily load and unload the bikes
- Easy mounting of bikes through detachable bike holders with lockable Thule AcuTight torque limiter knobs that click when optimal torque is reached
- Adjustable wheel holders with straps featuring a pump buckle tensioning system to easily secure the bike wheels
- The platform lock creates excellent dynamic force control and perfectly secures the bikes during transport
- The platform is locked manually and can easily be clicked in the upward position when not being used
- The lifting frame is nice and tight during the ride thanks to the integrated safety straps

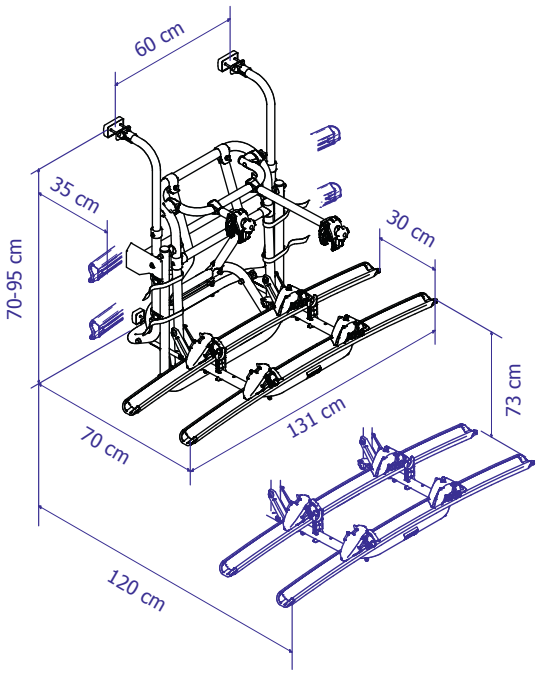

ELONGATION KIT

	Thule Lift V16 Elongation Kit Set of 2 longer arms - makes it possible to extend the mounting range of the Thule Lift V16 bike rack up to 95-150 cm See 'Bike Rack Accessories'

EXTENSION KIT

	Thule Lift V16 3rd Rail Kit Rail + bike holder See 'Bike Rack Accessories'

ACCESSORIES

- Thule Fatbike Rail
- Thule Strap Lock
- Thule Rear Warning Sign
- Thule Brake Straps
- Thule Bike Frame Adapter

307368	Thule Lift V16 - Manual
307369	Thule Lift V16 - Motor 12V
307370	Thule Lift V16 3rd Rail Kit
307371	Thule Lift V16 Elongation Kit 95-150 cm

User instructions

Thule Excellent

Thule Excellent - Standard

Thule Excellent - Short

INFO

Thule Excellent - Standard

- 2 bikes, extendable to 3 or 4
- Weight 10.6 kg
- Max. loading weight 60 kg
- Max. bike weight 30 kg
- Max. bike weight 4th rail 15 kg
- Rail distance 15 cm
- For vertical walls between 80-150 cm
- Suitable for e-bikes
- Finish: anodised or black

Thule Excellent - Short

- 2 bikes, extendable to 3 or 4
- Weight 10.6 kg
- Max. loading weight 60 kg
- Max. bike weight 30 kg
- Max. bike weight 4th rail 15 kg
- Rail distance 15 cm
- For vertical walls between 60-80 cm
- Suitable for e-bikes

FEATURES

- Recommended for vertical motorhomes or caravan walls
- Stylish black design (standard version)
- Top safety and functionality
- Extra strong aluminium which guarantees stability and reliability
- Sliding rails – easily adjustable in depth and from left to right
- Adjustable wheel holders with straps featuring a pump buckle tensioning system to easily secure the bike wheels
- Easy mounting of bikes through detachable bike holders with lockable Thule AcuTight torque limiter knobs that click when optimal torque is reached
- The platform lock creates excellent dynamic force control and perfectly secures the bikes during transport
- The platform is locked automatically and can easily be clicked in the upward position when not being used
- Fits all pre-installed fixation points and rails (except for Hymer)
- Standardly equipped with a Thule Bottom Mounting Rail (anodised)

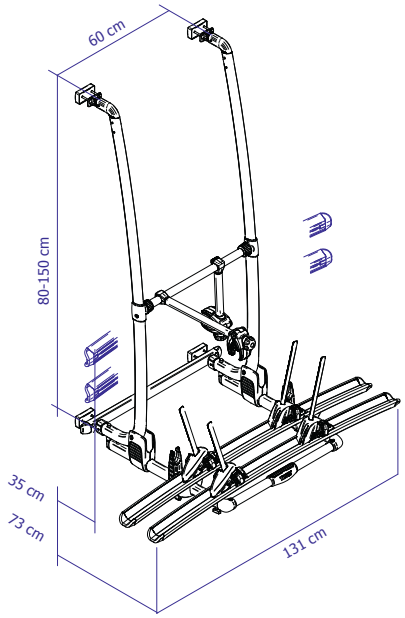

Thule Excellent - Standard

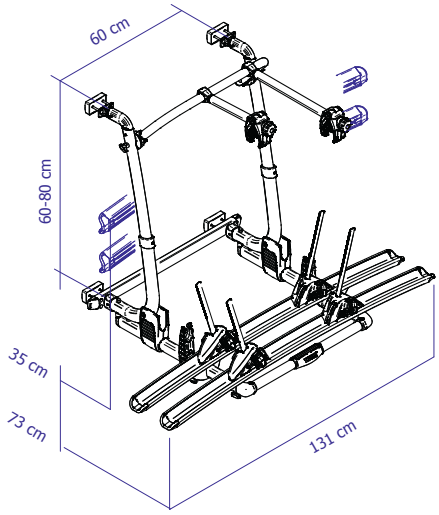

Thule Excellent - Short

EXTENSION KITS

	Thule Excellent 3rd Rail Kit Rail + bike holder See 'Bike Rack Accessories'
	Thule Excellent 4th Rail Kit Rail + adapter + bike holder See 'Bike Rack Accessories'

ACCESSORIES

- Thule Fatbike Rail
- Thule Strap Lock
- Thule Bike Cover
- Thule Rear Warning Sign
- Thule Brake Straps
- Thule Bike Frame Adapter

309821	Thule Excellent - Standard - Anodised
302033	Thule Excellent - Standard - Black
309822	Thule Excellent - Short - Anodised
309823	Thule Excellent 3rd Rail Kit - Anodised
309824	Thule Excellent 4th Rail Kit - Anodised
302034	Thule Excellent 3rd Rail Kit - Black
302035	Thule Excellent 4th Rail Kit - Black

User instructions

Thule Elite G2

Thule Elite G2 - Standard

Thule Elite G2 - Short

INFO

Thule Elite G2 - Standard

- 2 bikes, extendable to 3 or 4
- Weight 10.1 kg
- Max. loading weight 60 kg
- Max. bike weight 30 kg
- Max. bike weight 4th rail 15 kg
- Rail distance 15 cm
- For vertical walls between 80-150 cm
- Suitable for e-bikes

Thule Elite G2 - Short

- 2 bikes, extendable to 3 or 4
- Weight 9.5 kg
- Max. loading weight 60 kg
- Max. bike weight 30 kg
- Max. bike weight 4th rail 15 kg
- Rail distance 15 cm
- For vertical walls between 50-80 cm
- Suitable for e-bikes

FEATURES

- Recommended for vertical motorhomes or caravan walls
- Robust oval profiles for extreme stability and solidity
- Sliding rails – easily adjustable from left to right
- Adjustable wheel holders with straps for easily securing bike wheels
- Easy mounting of bikes through detachable bike holders with lockable Thule AcuTight torque limiter knobs that click when optimal torque is reached
- The platform lock creates excellent dynamic force control and perfectly secures the bikes during transport
- The platform is locked manually and can easily be clicked in the upward position when not in use
- Fits all pre-installed fixation points and rails (except for Hymer) - alternative available for Hymer (ref. 306562)
- Standardly equipped with a Thule Bottom Mounting Rail

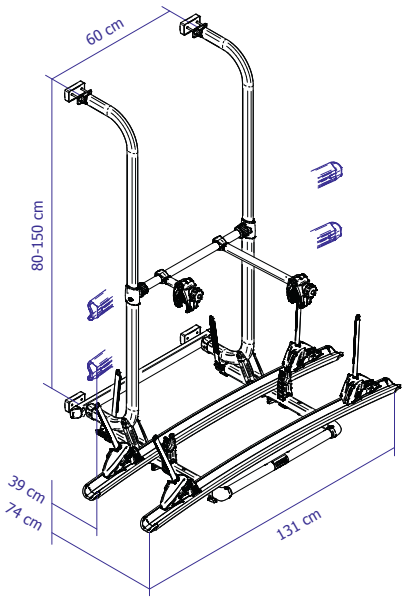

Thule Elite G2 - Standard

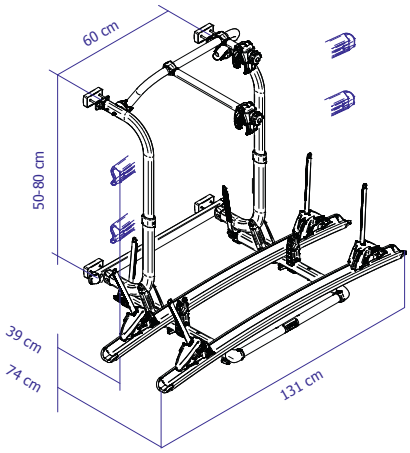

Thule Elite G2 - Short

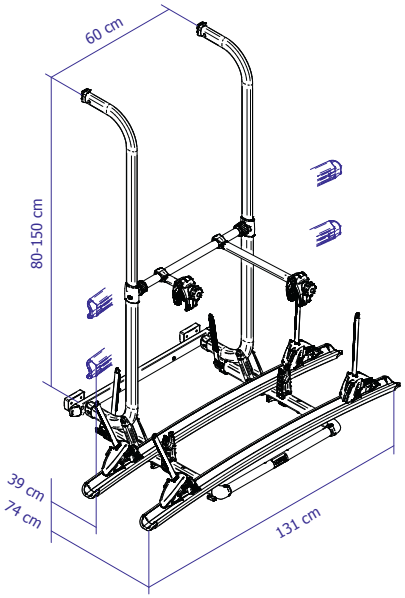

Thule Elite G2 - Hymer Hooks

EXTENSION KITS

	Thule Elite G2 3rd Rail Kit Rail + bike holder See 'Bike Rack Accessories'
	Thule Elite G2 4th Rail Kit Rail + adapter + bike holder See 'Bike Rack Accessories'

ACCESSORIES

- Thule Fatbike Rail
- Thule Strap Lock
- Thule Bike Cover
- Thule Rear Warning Sign
- Thule Brake Straps
- Thule Bike Frame Adapter

306560	Thule Elite G2 - Standard
306561	Thule Elite G2 - Short
306562	Thule Elite G2 - HH (Hymer Hooks)
306565	Thule Elite G2 3rd Rail Kit
309824	Thule Elite G2 4th Rail Kit

Thule Elite G2 One Bike

INFO

- 1 bike
- Weight 6.7 kg
- Max. loading weight 30 kg
- For vertical walls between 80-150 cm
- Suitable for one e-bike

FEATURES

- Recommended for vertical motorhomes or caravan walls
- Short platform to transport only one bike
- Especially for caravan users to have an equal load of two bikes on the caravan: one bike on the rear wall and one on the A-frame
- Robust oval profiles for extreme stability and solidity
- Sliding rail – easily adjustable from left to right
- Adjustable wheel holders with straps to easily secure the bike wheels
- Easy mounting of the bike through detachable bike holder with lockable Thule AcuTight torque limiter knob that clicks when optimal torque is reached
- The platform lock creates excellent dynamic force control and perfectly secures the bike during transport
- Standardly equipped with a Thule Bottom Mounting Rail

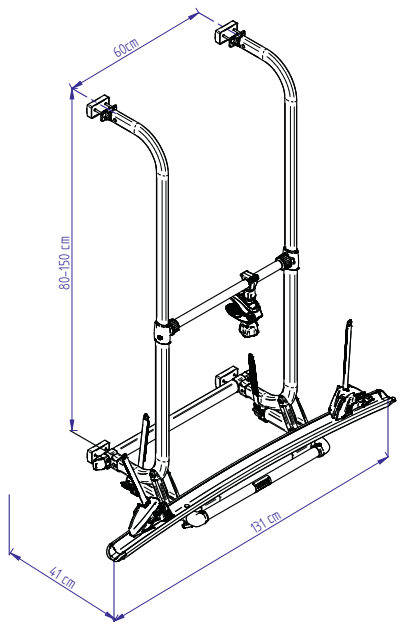

ACCESSORIES

- Thule Fatbike Rail
- Thule Strap Lock
- Thule Bike Cover
- Thule Rear Warning Sign
- Thule Brake Straps
- Thule Bike Frame Adapter

302047	Thule Elite G2 One Bike

Thule Sport G2

Thule Sport G2 - Standard

Thule Sport G2 - Short

INFO

Thule Sport G2 - Standard

- 2 bikes, extendable to 3
- Weight 8.2 kg
- Max. loading weight 50 kg
- Max. bike weight 19 kg
- Rail distance 15 cm
- For vertical walls between 80-150 cm

Thule Sport G2 - Short

- 2 bikes, extendable to 3
- Weight 7.9 kg
- Max. loading weight 50 kg
- Max. bike weight 19 kg
- Rail distance 15 cm
- For vertical walls between 40-70 cm

FEATURES

- Recommended for vertical motorhomes or caravan walls
- Sliding rails – easily adjustable from left to right
- Wheel straps that block the bike wheels, avoiding movement during transport
- Adjustable soft-touch bike holders to secure your bikes - optional locks available
- The platform lock creates excellent dynamic force control and perfectly secures the bikes during transport
- The platform is locked manually and can easily be clicked in the upward position when not being used
- Fits all pre-installed fixation points and rails (except forHymer)
- Standardly equipped with a Thule Bottom Mounting Rail

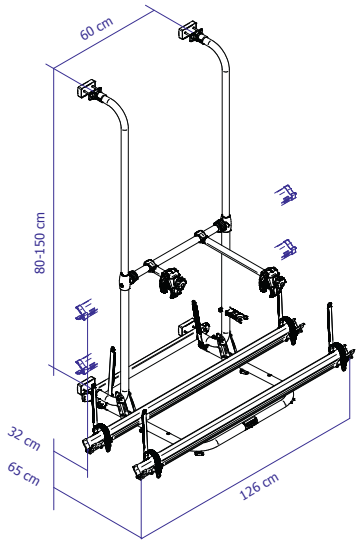

Thule Sport G2 - Standard

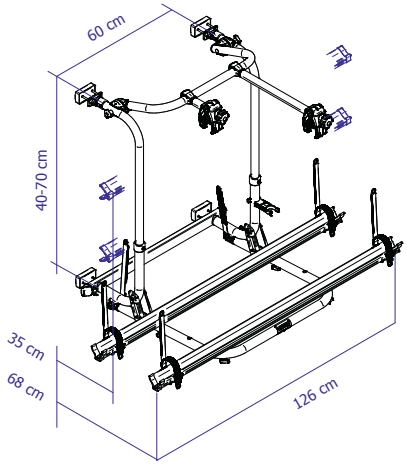

Thule Sport G2 - Short

EXTENSION KIT

	Thule Sport G2 3rd Rail Kit Rail + bike holder See 'Bike Rack Accessories'

ACCESSORIES

- Thule Strap Lock
- Thule Knob with Lock
- Thule Bike Cover
- Thule Rear Warning Sign
- Thule Brake Straps
- Thule Bike Frame Adapter
- Thule E-bike Rail Kit for Sport G2

307126	Thule Sport G2 - Standard
307127	Thule Sport G2 - Short
306577	Thule Sport G2 3rd Rail Kit

Thule Sport G2 Tour

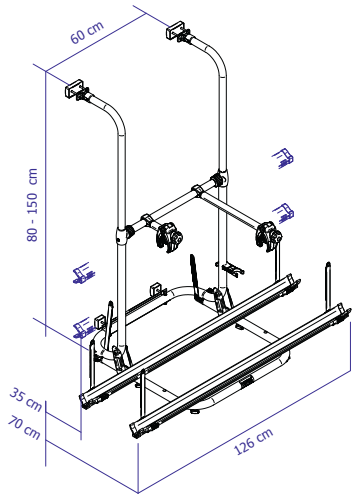

INFO

- 2 bikes, extendable to 3
- Weight 6.8 kg
- Max. loading weight 50 kg
- Max. bike weight 19 kg
- Rail distance 30 cm

FEATURES

- Suitable for motorhomes and caravan rear walls
- Possible to mount on curved rear walls as well
- Adjustable soft-touch bike holders to secure your bikes - optional locks available

306572	Thule Sport G2 Tour
306577	Thule Sport G2 3rd Rail Kit

Thule Sport G2 Hobby

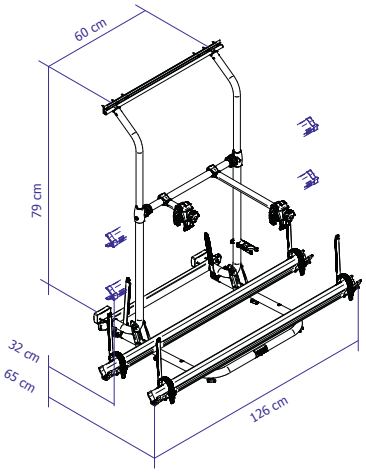

INFO

- 2 bikes, extendable to 3
- Weight 6.8 kg
- Max. loading weight 50 kg
- Max. bike weight 19 kg
- Rail distance 30 cm

FEATURES

- Suitable for Hobby caravans manufactured since 2004
- Standardly equipped with a bottom mounting rail
- Adjustable soft-touch bike holders to secure your bikes - optional locks available
- NOTE: special adapters available for Hobby caravans manufactured in 2014 and 2015

307128	Thule Sport G2 Hobby
306577	Thule Sport G2 3rd Rail Kit

Thule Sport G2 Universal

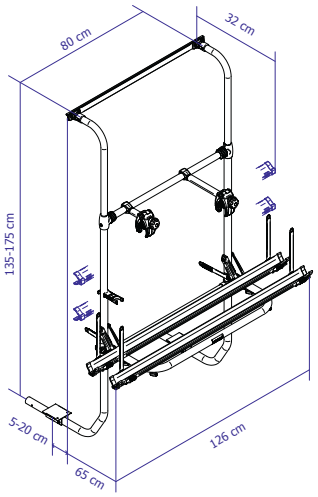

INFO

- 2 bikes
- Weight 8 kg
- Max. loading weight 38 kg
- Max. bike weight 19 kg
- Rail distance 15 cm

FEATURES

- Suitable for caravan rear walls
- Recommended in case of limited space due to a window or bumper
- Attached under the base of the caravan
- Adjustable soft-touch bike holders to secure your bikes - optional locks available

306563	Thule Sport G2 Universal

Thule Essential

Thule Essential - Standard

Thule Essential - Short

INFO

Thule Essential - Standard

- 2 bikes, extendable to 3
- Weight 7.9 kg
- Max. loading weight 50 kg
- Max. bike weight 19 kg
- Rail distance 15 cm
- For vertical walls between 80-150 cm

Thule Essential - Short

- 2 bikes, extendable to 3
- Weight 7.1 kg
- Max. loading weight 50 kg
- Max. bike weight 19 kg
- Rail distance 15 cm
- For vertical walls between 40-70 cm

FEATURES

- Recommended for vertical motorhomes or caravan walls
- Modern and intelligent design
- Steel platform for optimal stability
- Sliding rails – easily adjustable from left to right
- Ultra-resistant and adjustable fabric straps to attach to the wheels
- Adjustable soft-touch bike holder to secure one bike - optional lock available
- The platform lock creates excellent dynamic force control and perfectly secures the bikes during transport
- The platform is locked manually and can easily be clicked in the upwards position when not being used
- Most pieces of the bike rack are delivered pre-assembled
- Easy-to-install: the Thule Universal Hook fits all pre-installed fixation points and rails (except for Hymer)
- Old Thule fixation points can be replaced if necessary

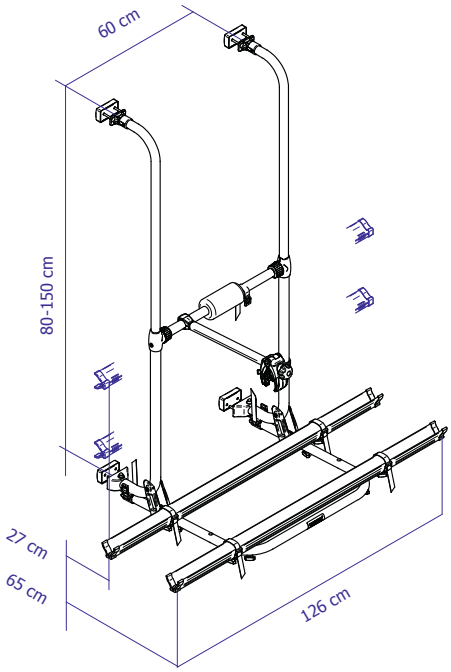

Thule Essential - Standard

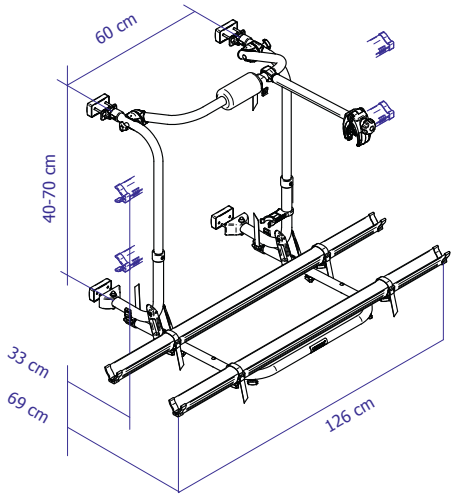

Thule Essential - Short

EXTENSION KIT

	Thule Essential 3rd Rail Kit Rail + bike holder See 'Bike Rack Accessories'

ACCESSORIES

- Thule Strap Lock
- Thule Knob with Lock
- Thule Bike Cover
- Thule Rear Warning Sign
- Thule Brake Straps
- Thule Bike Frame Adapter

309825	Thule Essential - Standard
309826	Thule Essential - Short
309827	Thule Essential 3rd Rail Kit

Thule VeloSlide

Closed

Opened

INFO

Thule VeloSlide - Standard

- 2 bikes
- Weight 20.9 kg
- Max. loading weight 70 kg
- Max. bike weight 35 kg

Thule VeloSlide - Short

- 2 bikes
- Weight 19.9 kg
- Max. loading weight 70 kg
- Max. bike weight 35 kg

SPECIFICATIONS

- Carries 2 bikes up to 70 kg in total
- Ultra-convenient and easy-to-use due to one-handed operation
- Takes up limited amount of space

FEATURES

- Mounted in the vehicle's garage space
- Fits larger bikes through its optimal use of vertical space. Please ensure your RV garage is high enough for your bikes
- If needed, you can lower the top point of the bikes with +/- 10cm by replacing the front wheel of the bike with a Thule Forkmount Adapter (Quick Release / Thru Axle) - see chapter 'Bike Rack Accessories'
- Both models can be installed in the driving direction
- NOTE: car seats and rear compartment need to be divided by a suitable partitioning system.
- The bike rack may not be mounted in the same room as the travelers
- Mounting rails available in two lengths - sold separately
- Safe transportation of 2 e-bikes, up to 70 kg in total
- Convenient and comfortable handling of the bikes - all done while standing outside
- Slides out up to 1.35 meter (short model) or up to 1.50 meter (standard model)
- Slides partially into the garage for easy access to other cargo around the bike rack
- Adjustable soft-touch bike holders to hold secure your bikes - optional locks available
- Wheel fixations with pump buckle straps in order to keep your bike wheels in position
- Bike's position can be optimised without tools - even while the bike is already attached to the rack
- Takes up little space when not being used - the rack can be slid (without bikes) to one side or removed completely, leaving only the mounting rails on the garage floor

Thule VeloSlide - Standard

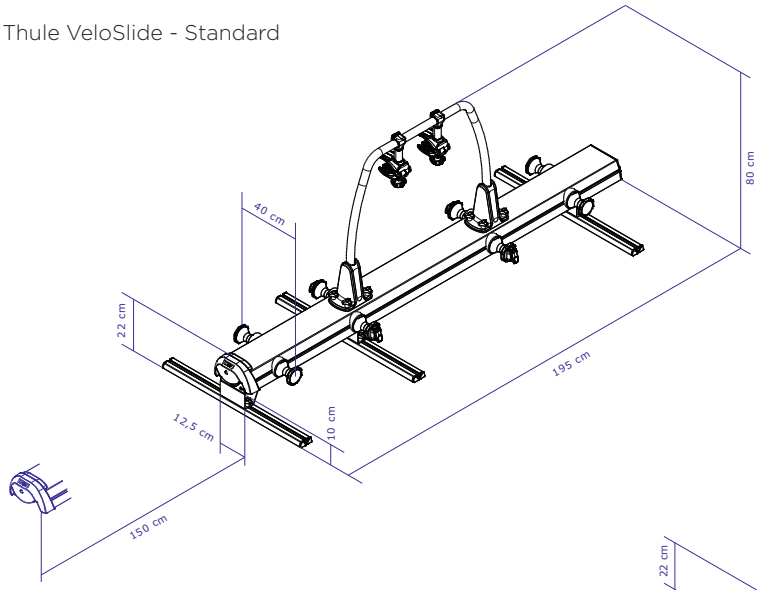

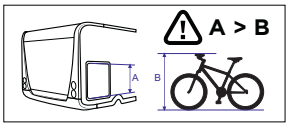

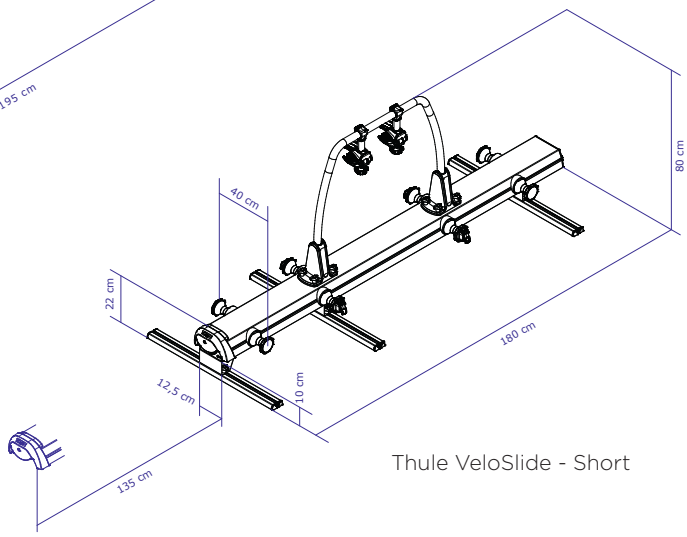

Thule VeloSlide - Short

ACCESSORIES

- Thule Bike Frame Adapter
- Thule Forkmount Adapter Kits for Thule VeloSlide

MOUNTING RAILS

Thule VeloSlide Mounting Rails
70 cm
(1 set = 3 pieces)

Thule VeloSlide Mounting Rails
140 cm
(1 set = 3 pieces)

302014	Thule VeloSlide - Standard
302044	Thule VeloSlide - Short
302015	Thule VeloSlide Mounting Rails - 70 cm
302016	Thule VeloSlide Mounting Rails - 140 cm

User instructions

Thule Sport G2 Garage

INFO

- 2 bikes, extendable to 3 or 4
- Weight 5.6 kg
- Max. loading weight 50 kg
- Max. bike weight 19 kg
- Rail distance 15 cm

FEATURES

- Suitable for motorhomes and caravans
- Fixed inside the garage compartment
- Adjustable soft-touch bike holders to secure your bikes
- Foldable when not being used

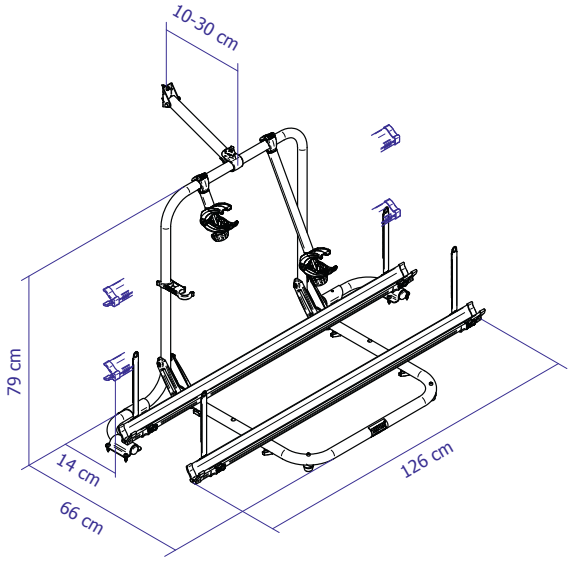

EXTENSION KITS

	Thule Sport G2 3rd Rail Kit Rail + bike holder See 'Bike Rack Accessories'
	Thule Sport G2 Garage 4th Rail Kit Rail + bike holder See 'Bike Rack Accessories'

ACCESSORIES

- Thule Brake Straps
- Thule Bike Frame Adapter

306574	Thule Sport G2 Garage
306577	Thule Sport G2 3rd Rail Kit
306578	Thule Sport G2 Garage 4th Rail Kit

Bike Racks for caravans - Fit Guide

The range designed for A-frames

	Thule Caravan Superb Standard	Thule Caravan Superb Short V16	Thule Caravan Superb XT Standard Black	Thule Caravan Superb XT Short Black	Thule Caravan Smart	Thule Caravan Light
Product No.	307130	307329	302031	302030	307129	306598
Number of bikes	2 + 1 (+ 307131)	2	2 + 1 (+ 302032)	2	2	2
Suitable for e-bikes	Yes	Yes	Yes	Yes	Yes	No
Max. loading weight	60 kg	60 kg	60 kg	60 kg	50 kg	40 kg
Max. bike weight	30 kg	30 kg	30 kg	30 kg	30 kg	20 kg
Max. tire width	2.1" / 53 mm	2.1" / 53 mm	2.75" / 70 mm	2.75" / 70 mm	2.1" / 53 mm	2.1" / 53 mm
Weight	9.7 kg	9.6 kg	10 kg	9.9 kg	8.9 kg	4.7 kg
Suitable for short A-frames	No	Yes	No	Yes	Yes	No
Tiltable with bikes on	Yes	Yes	Yes	Yes	Yes	No
Adjustable Tilt-Stop System	Yes	Yes	Yes	Yes	Yes	No
Bike holders	integrated locks	integrated locks	integrated locks	integrated locks	integrated locks	straps + foam pads
Wheel holders	Sport G2 straps	Sport G2 straps	straps with pump buckle system	straps with pump buckle system	Sport G2 straps	Sport G2 straps

FEATURES

Locking mechanism:

Easy to lock the tiltable platform to the base frame, no loose parts.
Important: both sides need to be locked!

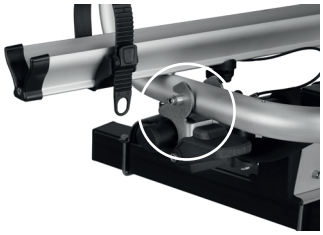

Adjustable Tilt-Stop System:

Enables you to set the maximum angle to tilt the bike rack

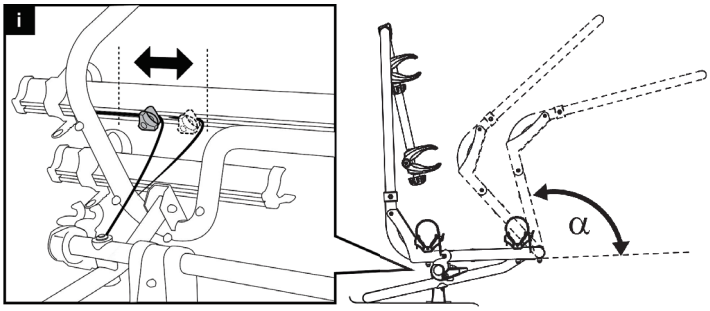

SAFETY INSTRUCTIONS

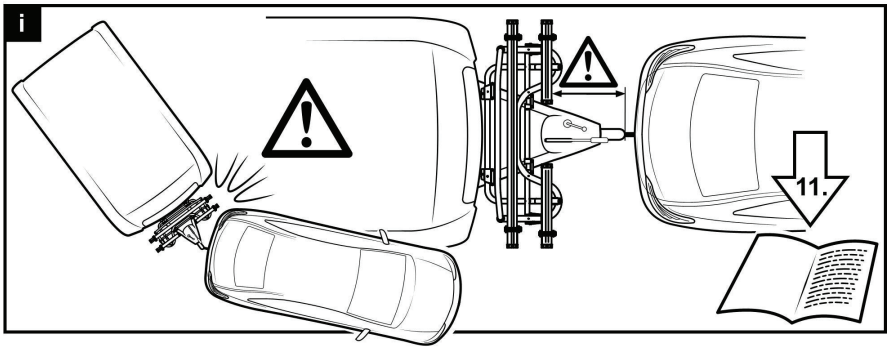

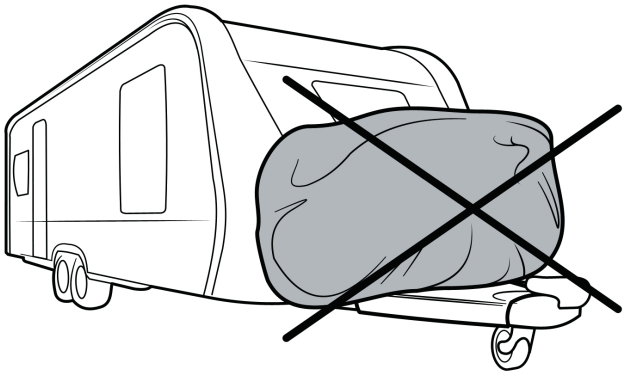

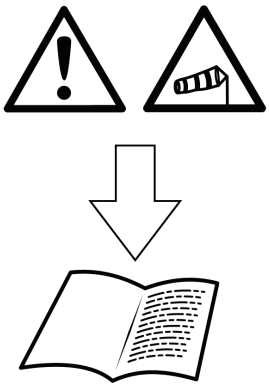

Thule Caravan Superb

Thule Caravan Superb - Standard

Thule Caravan Superb - Short V16

INFO

Thule Caravan Superb - Standard

- 2 bikes, extendable to 3
- Weight 9.7 kg
- Max. loading weight 60 kg
- Max. bike weight 30 kg
- Rail distance 28 cm
- Suitable for e-bikes (max. 2 e-bikes or 3 regular bikes)

Thule Caravan Superb - Short V16

- 2 bikes
- Weight 9.6 kg
- Max. loading weight 60 kg
- Max. bike weight 30 kg
- Rail distance 20 cm
- Suitable for e-bikes

FEATURES

- Recommended for normal A-frames (for short A-frames, use the Thule Caravan Superb Short V16, Thule Caravan Superb XT Black Short or the Thule Caravan Smart)
- Easy to mount bikes thanks to the lowered platform
- Completely tiltable with bikes on, providing easy access to the front locker of the caravan
- Adjustable Tilt-Stop System for one hand handling and protection of the car
- Ergonomic and high security platform lock
- Easy mounting of bikes through detachable bike holders with lockable Thule AcuTight torque limiter knobs that click when optimal torque is reached

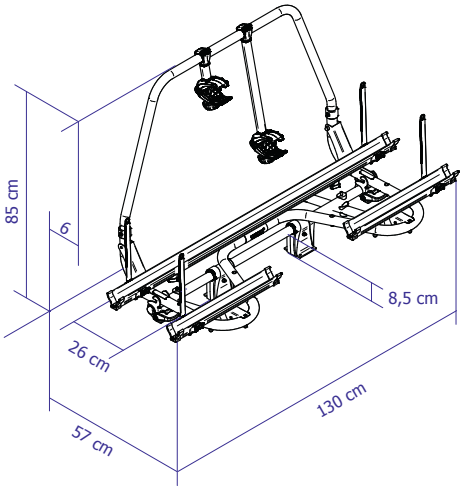

Thule Caravan Superb - Standard

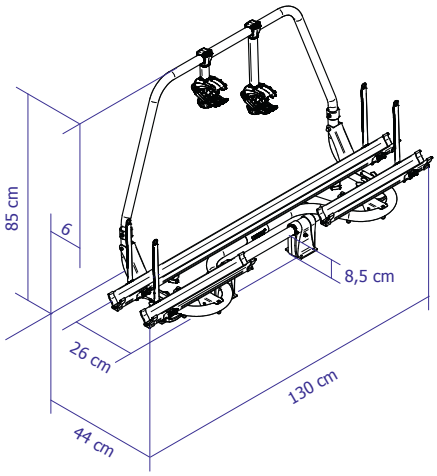

Thule Caravan Superb - Short V16

EXTENSION KIT (only for standard version)

	Thule Caravan Superb 3rd Rail Kit Rail + bike holder See 'Bike Rack Accessories'

ACCESSORIES

- Thule Strap Lock
- Thule Brake Straps
- Thule Bike Frame Adapter

307130	Thule Caravan Superb - Standard
307329	Thule Caravan Superb - Short V16
307131	Thule Caravan Superb 3rd Rail Kit

User instructions

Thule Caravan Superb XT Black

Thule Caravan Superb XT Black - Standard

Thule Caravan Superb XT Black - Short

INFO

Thule Caravan Superb XT Black - Standard

- 2 bikes, extendable to 3
- Weight 10 kg
- Max. loading weight 60 kg
- Max. bike weight 30 kg
- Rail distance 28 cm
- Suitable for e-bikes (max. 2 e-bikes or 3 regular bikes)

Thule Caravan Superb XT Black - Short

- 2 bikes
- Weight 9.9 kg
- Max. loading weight 60 kg
- Max. bike weight 30 kg
- Rail distance 20 cm
- Suitable for e-bikes

FEATURES

- Stylish black design
- Easy to mount bikes thanks to the lowered platform
- Adjustable wheel holders with straps with pump buckle tensioning system, that easily secure the bike wheels
- Easy mounting of bikes due to detachable bike holders with lockable Thule AcuTight torque limiter knobs that click when optimal torque is reached
- Completely tiltable with bikes already mounted, providing easy access to the front locker of the caravan
- Adjustable Tilt-Stop System for one hand handling and protection of the car
- Ergonomic and high-security platform lock

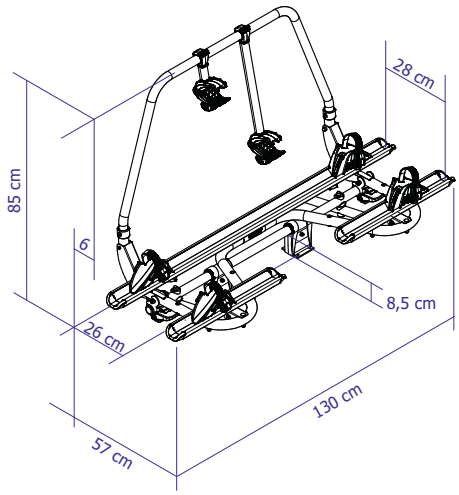

Thule Caravan Superb XT Black - Standard

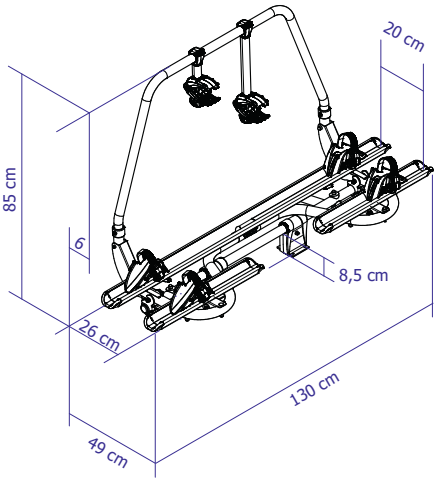

Thule Caravan Superb XT Black - Short

EXTENSION KIT (only for standard version)

	Thule Caravan Superb XT Black 3rd Rail Kit Rail + bike holder See 'Bike Rack Accessories'

ACCESSORIES

- Thule Strap Lock
- Thule Brake Straps
- Thule Bike Frame Adapter

302031	Thule Caravan Superb XT Black - Standard
302030	Thule Caravan Superb XT Black - Short
302032	Thule Caravan Superb XT Black 3rd Rail Kit

Thule Caravan Smart

INFO

- 2 bikes (max. 1 e-bike or 2 regular bikes)
- Weight 8.9 kg
- Max. loading weight 50 kg
- Max. bike weight 30 kg
- Rail distance 15 cm

FEATURES

- Recommended for normal and short A-frames
- Easy to mount bikes thanks to the lowered platform
- Completely tiltable with bikes already mounted, providing easy access to the front locker of the caravan
- Adjustable Tilt-Stop System for one hand handling and protection of the car
- Ergonomic and high-security platform lock
- Easy mounting of bikes through detachable bike holders with lockable Thule AcuTight torque limiter knobs that click when optimal torque is reached

ACCESSORIES

- Thule Strap Lock
- Thule Knob with Lock
- Thule Brake Straps
- Thule Bike Frame Adapter

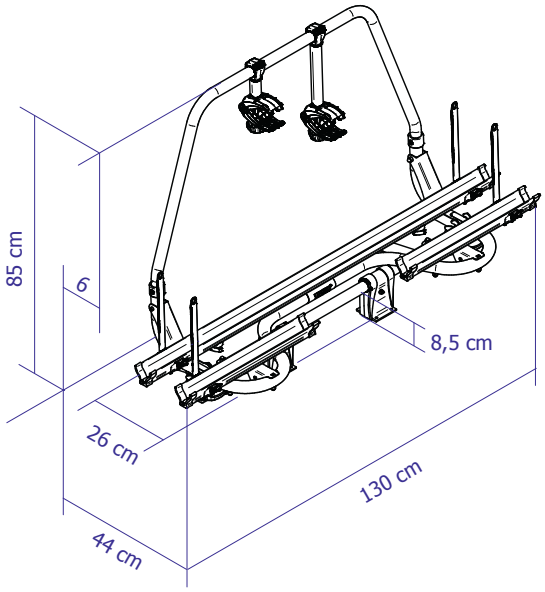

307129	Thule Caravan Smart

COMPARED DIMENSIONS - Thule Caravan Smart / Superb SV / Superb

NOTE - The maximum tilt angle depends on bikes and the type of A-frame

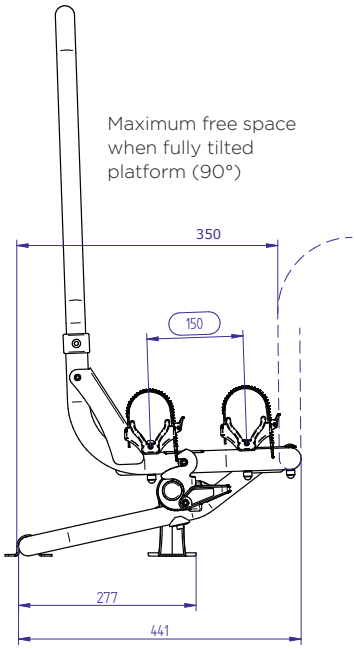

Thule Caravan Smart - 307129

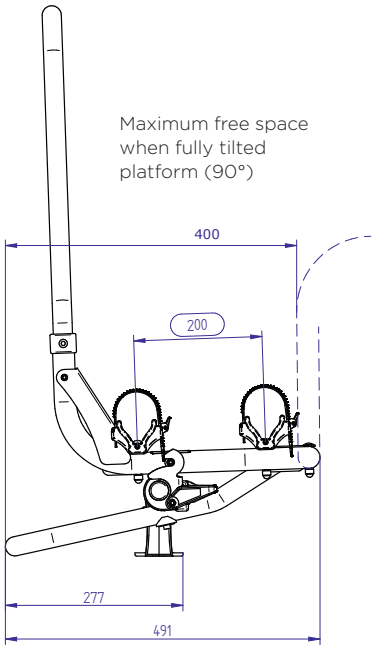

Thule Caravan Superb Short - 307329
Thule Caravan Superb XT Short - 302030

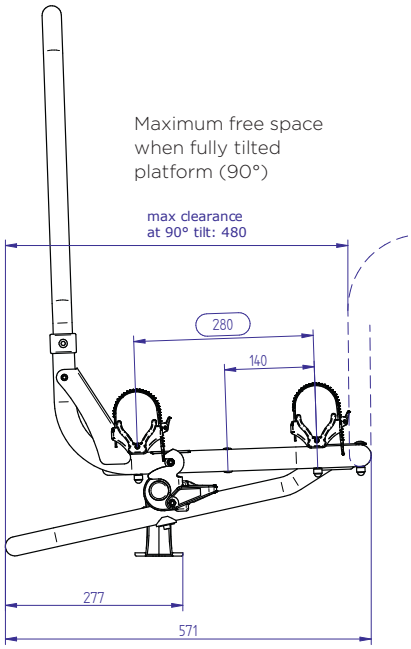

Thule Caravan Superb - 307130
Thule Caravan Superb XT - 302031

Thule Caravan Light

INFO

- 2 bikes
- Weight 4.7 kg
- Max. loading weight 40 kg
- Max. bike weight 20 kg

FEATURES

- Foam that prevents the bikes from damage during transport
- Wheel and bike holder straps that make it easier to fix the bikes
- Partly tiltable - the bikes need to be removed in order to access the storage space

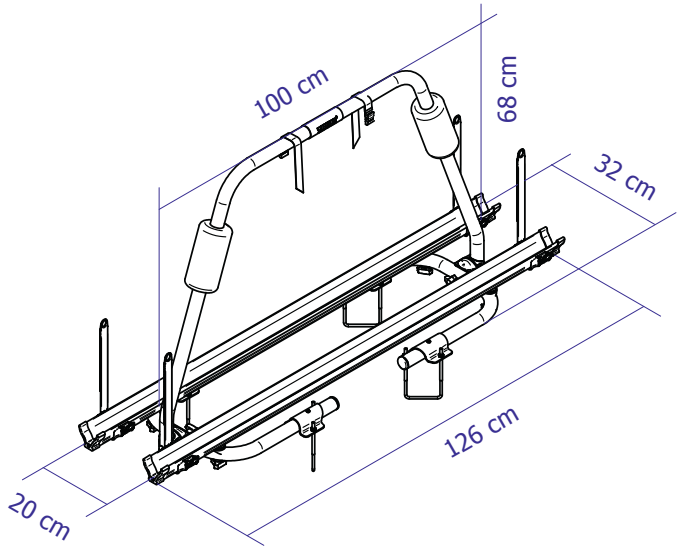

ACCESSORIES

- Thule Strap Lock
- Thule Bike Holder 1 with AcuTight lock
- Thule Brake Straps

306598	Thule Caravan Light

Thule WanderWay

Thule WanderWay

Thule WanderWay Black

INFO

- 2 bikes, extendable to 3 or 4
- Weight 13.9 kg
- Max. loading weight 60 kg
- Max. bike weight 30 kg (2-bike) - 20 kg (3-bike)
- Max. bike weight 4th rail 15 kg
- Rail distance 31 cm
- Suitable for e-bikes

FEATURES

- Quick and simple to mount thanks to the dedicated fit to the VW T6 minivan (! does not fit VW T5)
- Standardly carries two bikes. Possible to increase the load capacity up to 4 bikes by adding a 3rd- and 4th bike adapter
- Sliding rails – easily adjustable from left to right
- Adjustable wheel holders with straps featuring a pump buckle tensioning system to easily secure the bike wheels
- Easy mounting of bikes through detachable bike holders with lockable Thule AcuTight torque limiter knobs that click when optimal torque is reached
- Possible to open the vehicle trunk without any mounted bikes
- The platform folds up vertically when not in use and folds flat for easy transport and convenient storage

ACCESSORIES

- Thule Strap Lock
- Thule Brake Straps

911001	Thule WanderWay
911002	Thule WanderWay Black
911600	Thule WanderWay 3rd Rail Kit
911700	Thule WanderWay 4th Rail Kit
911602	Thule WanderWay 3rd Rail Kit Black
911702	Thule WanderWay 4th Rail Kit Black

Thule Elite Van XT

Thule Elite Van XT - Anodised

Thule Elite Van XT - Black

INFO

- 2 bikes, not extendable
- Weight 10.5 kg
- Max. loading weight 35 kg
- Max. bike weight 19 kg
- Rail distance 20 cm

SPECIFICATIONS

- Stylish design
- Quick and easy installation without drilling in the door
- Perfect finish

FEATURES

- Suitable for rear doors of Ducato, Jumper and Boxer vans manufactured from 2007 onwards (307340/302013)
- Suitable for rear doors of Volkswagen Crafter vans manufactured from 2017 onwards (302018)
- Suitable for rear doors of Sprinter vans manufactured from 2006 onwards and VW Crafter vans before 2017 (302043)
- Special variant designed for the Ford Transit H3
- Only suitable for H2 and H3 models
- The black version perfectly fits vans with a sporty and off-road look
- Bike rack is clamped and glued on the rear door and requires no drilling
- Platform is adjustable to 3 height positions - see drawing next page
- Rubber sealing strips create a perfect finish, even when the bike rack is taken off
- Ajustable wheel holders with straps featuring a pump buckle tensioning system to easily secure the bike wheels
- Easy mounting of bikes through detachable bike holders with lockable Thule AcuTight torque limiter knobs that click when optimal torque is reached
- 20 cm distance between the rails enables easier loading of the bikes
- Rear doors can be opened while bikes are mounted
- Smart connections from bike rack to mounting rails - easy to unhook and take the bike rack off when not being used

DIMENSIONS

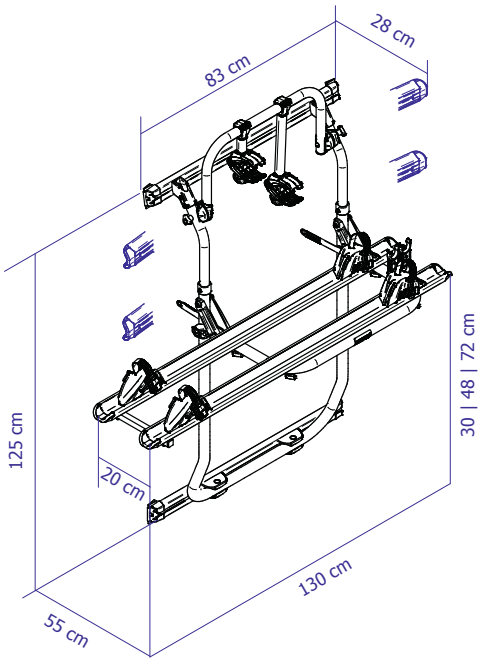

Thule Elite Van XT - Anodised/Black
Ducato, Jumper, Boxer ≥ 2007
(307340/302013)

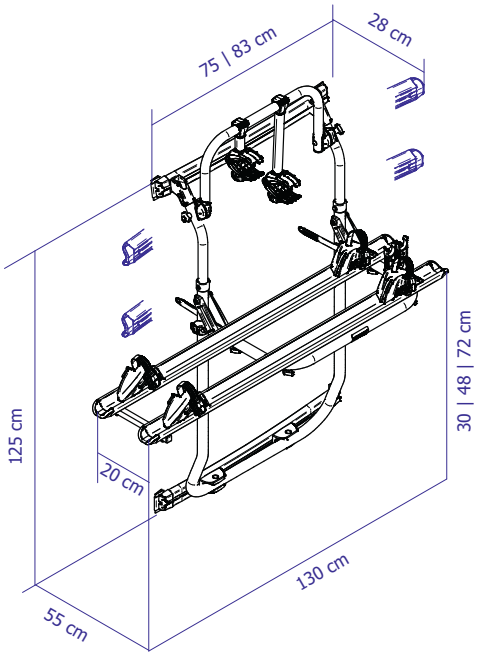

Thule Elite Van XT - Black
VW Crafter ≥ 2017
(302018)

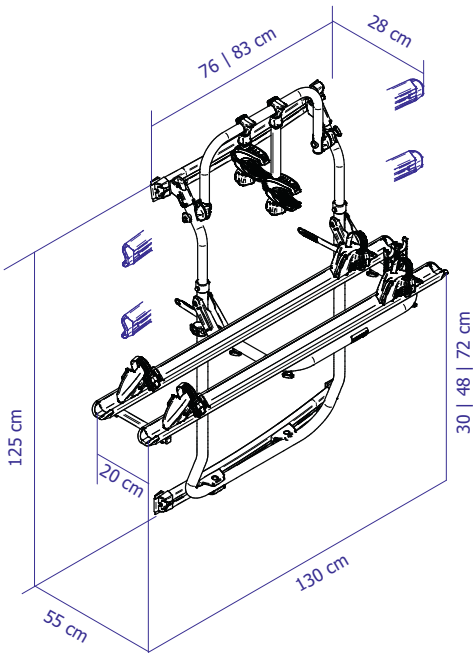

Thule Elite Van XT - Black
Sprinter > 2006 + VW Crafter < 2017
(302043)

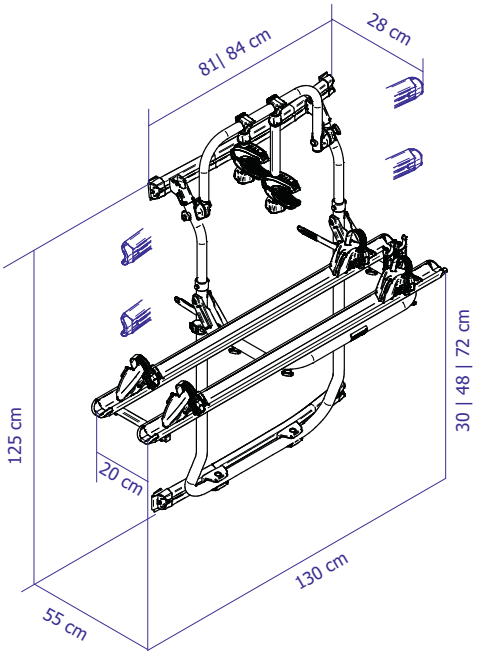

Thule Elite Van XT - Black
Ford Transit H3
(302067)

PLATFORM - 3 HEIGHT POSITIONS

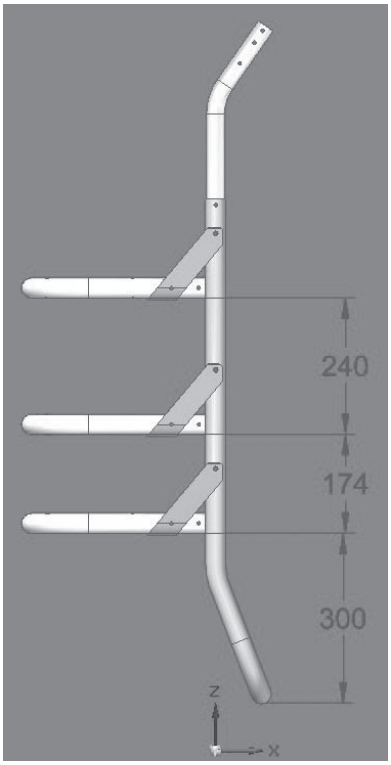

ACCESSORIES

- Thule Strap Lock
- Thule Knob with Lock
- Thule Brake Straps
- Thule Rear Warning Sign
- Thule Bike Frame Adapter

307340	Thule Elite Van XT - Anodised (Ducato, Jumper, Boxer)
302013	Thule Elite Van XT - Black (Ducato, Jumper, Boxer)
302018	Thule Elite Van XT - Black (VW Crafter)
302043	Thule Elite Van XT - Black (Sprinter, VW Crafter)
New 302067	Thule Elite Van XT - Black Ford Transit H3

Thule Sport G2 Compact

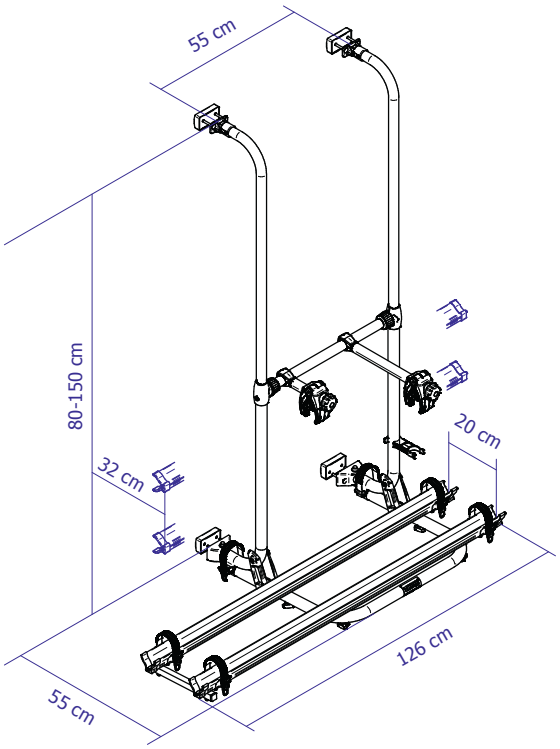

INFO

- 2 bikes, not extendable
- Weight 7.2 kg
- Max. loading weight 35 kg
- Max. bike weight 19 kg
- Rail distance 20 cm
- For rear doors between 80-150 cm

FEATURES

- Compact design
- Suitable for vans with double rear doors and for vehicles with curved surfaces thanks to a 4 point fixation system
- Rear doors can be opened while bikes are mounted
- Frame width: 55 cm center to center (horizontal frame dimension)
- Mounted through the door with bolts and mounting plates
- Vehicle door should be reinforced if necessary
- Adjustable soft-touch bike holders to secure your bikes - optional locks available
- Not suitable for Ducato/Jumper/Boxer vans

ACCESSORIES

- Thule Strap Lock
- Thule Knob with Lock
- Thule Brake Straps
- Thule Rear Warning Sign
- Thule Bike Frame Adapter

307341	Thule Sport G2 Compact

Bike Rack Accessories

EXTENSION KITS	
Thule Excellent 3rd Rail Kit (ano-black)	192
Thule Excellent | Elite G2 4th Rail Kit (ano-black)	192
Thule Elite G2 3rd Rail Kit	193
Thule Sport G2 3rd Rail Kit	194
Thule Sport G2 Garage 4th Rail Kit	194
Thule Essential 3rd Rail Kit	195
Thule Caravan Superb 3rd Rail Kit	195
Thule Caravan Superb XT 3rd Rail Kit (black)	196
Thule Lift V16 3rd Rail Kit	196
Thule WanderWay 3rd Rail Kit (ano-black)	197
Thule WanderWay 4th Rail Kit (ano-black)	197

ACCESSORIES	
Thule VeloSlide Fork mount Quick Release Adapter	198
Thule VeloSlide Fork mount Thru Axle Adapter	199
Thule Bike Holders with AcuTight Knob - Anodised	200
Thule Bike Holders with AcuTight Knob - Black	201
Thule Bike Holders Thule Sport / Thule Elite G1	202
Thule AcuTight Knob	203
Thule One-Key System	203
Thule Bike Frame Adapter	204
Thule Carbon Frame Protector	204
Thule Brake Straps	205
Thule E-bike Rail for Thule Sport G2	205
Thule Fatbike Rail Curved Ano	207
Thule Fatbike Rail Short Black	208
Thule Fatbike Rail Straight Black	209
Thule Bike Cover	210
Thule Cable Lock	210
Thule Strap Lock	211
Thule Wheel Adapter	211
Thule Rear Warning Sign	212
Thule Wheel Bag XL	212

INSTALLATION SETS	
Overview	213
Thule Top Mounting Rail	214
Thule Bottom Mounting Rail	214
Thule Bottom Mounting Rail for Blind Mounting	215
Thule Cover for Mounting Rail	215
Thule Bike Rack Lift Adapter for Bottom Mounting Rail	216
Thule Mounting Rail for Caravan Rail	216
Thule Bike Rack Adapter Hymer Top Brackets	217
Thule Bike Rack Adapter for Curved Walls	217
Thule Lift V16 Elongation Kit	218
Thule Bike Rack Adapter for Dethleffs, Carado & Sunlight	219
Thule Adapter 4 Point Fixation Fiamma	220
Thule XL U-bolts for A-frame bike racks	220
Thule U-Bolts A-Frame AL-KO Vario X	221
Thule Eriba Bracket	221
Thule Rail Support Bracket for Hobby Caravan Rail < 2003	222
Thule Bike Rack Adapter for Hobby 2014 caravans	223
Thule Bike Rack Adapter for Hobby 2015 caravans	224

THULE EXCELLENT	In the package	Thule Excellent 3rd Rail Kit	Thule Excellent 4th Rail Kit
Standard (anodised) - 309821 Standard (black) - 302033 Short (anodised) - 309822	Bike rack for 4 bikes, equipped for 2 bikes Bikes on position 2 & 3 2 bike holders with identical locks One key to operate 2 lockable bike holders	**309823 (anodised) / 302034 (black)** 3rd bike rail + bike holder with lock Install the extension on position 1 (closest to vehicle)	**309824 (anodised) / 302035 (black)** 4th bike rail + clip on adapter + double clamp bike holder with lock Install the extension on position 4 (max. 15 kg)
THULE ELITE G2	**In the package**	**Thule Elite G2 3rd Rail Kit**	**Thule Elite G2 4th Rail Kit**
Standard - 306560 Short - 306561	Bike rack for 4 bikes, equipped for 2 bikes Bikes on position 1 & 3 2 bike holders with identical locks One key to operate 2 lockable bike holders	**306565** 3rd bike rail + bike holder with lock Install the extension on position 2	**309824** 4th bike rail + clip on adapter + double clamp bike holder with lock Install the extension on position 4 (max. 15 kg)
THULE SPORT G2	**In the package**	**Thule Sport G2 3rd Rail Kit**	
Standard - 307126 Short - 307127	Bike rack for 3 bikes, equipped for 2 bikes Bikes on position 1 & 3 2 bike holders without locks Optional: 526000 - Knob with lock (2 pcs) Change knobs on all bike holders One key to operate 2 lockable bike holders	**306577** 3rd bike rail + bike holder without lock Install the extension on position 2 3 bike holders without locks Optional: 527000 - Knob with lock (4 pcs) Change knobs on all bike holders One key to operate 3 lockable bike holders	
THULE ESSENTIAL	**In the package**	**Thule Essential 3rd Rail Kit**	
Standard - 309825 Short - 309826	Bike rack for 3 bikes, equipped for 2 bikes Bikes on position 1 & 3 1 bike holder without lock, 1 bike strap and foam bumper Optional: 306463 - Bike Holder 1 with Lock Change knob with lock from bike holder 1 to bike holder 3 Optional: 526000 - Knob with lock (2 pcs) Change knobs on all bike holders One key to operate 2 lockable bike holders	**309827** 3rd bike rail + bike holder without lock Install the extension on position 2 2 bike holders without locks, 1 bike strap and foam bumper Optional: 306463 - Bike Holder 1 with Lock Change knob with lock from bike holder 1 to bike holder 3 Optional: 527000 - Knob with lock (4 pcs) Change knobs on all bike holders One key to operate 3 lockable bike holders	

Thule Excellent 3rd Rail Kit

INFO

- Extension kit for the Thule Excellent with rail slider that provides free movement of the rail in all directions
- Easy mounting of the bike through a detachable bike holder with a lockable Thule AcuTight torque limiter knob that clicks when optimal torque is reached
- The wheel straps with pump buckles help you set up the bikes, offering comfortable fastening of the wheels
- Content:
  - 1 rail
  - 1 bike holder

309823	Thule Excellent 3rd Rail Kit - Anodised
302034	Thule Excellent 3rd Rail Kit - Black

Thule Excellent | Elite G2 4th Rail Kit

INFO

- Extension kit for the Thule Excellent | Elite G2 bike racks
- The 4th rail is fixed outwards and is not adjustable
- Easy mounting of the bike through a detachable bike holder with a lockable Thule AcuTight torque limiter knob that clicks when optimal torque is reached
- The wheel straps with pump buckles help you set up the bikes, offering comfortable fastening of the wheels
- Maximum loading weight: 15 kg
- Content:
  - 1 rail
  - 1 bike holder

309824	Thule Excellent | Elite G2 4th Rail Kit - Anodised
302035	Thule Excellent 4th Rail Kit - Black

Thule Elite G2 3rd Rail Kit

INFO

- Extension kit for the Thule Elite G2 bike rack
- For fixed positioning of a 3rd bike on the vacant location of the rack
- Easy mounting of the bike through a detachable bike holder with a lockable Thule AcuTight torque limiter knob that clicks when optimal torque is reached
- Content:
  - 1 rail
  - 1 bike holder

306565	Thule Elite G2 3rd Rail Kit

Thule Sport G2 3rd Rail Kit

INFO

- Extension kit for the Thule Sport G2 bike rack
- For fixed positioning of a 3rd bike on the vacant location of the rack
- Content:
  - 1 rail
  - 1 bike holder

306577	Thule Sport G2 3rd Rail Kit

Thule Sport G2 Garage 4th Rail Kit

INFO

- Extension kit for the Thule Sport G2 Garage bike rack
- For fixed position of a 4th bike on the vacant location on the rack
- Content:
  - 1 rail
  - 1 bike holder

306578	Thule Sport G2 Garage 4th Rail Kit

Thule Essential 3rd Rail Kit

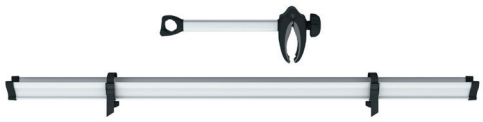

INFO

- Extension kit for the Thule Essential bike rack
- For fixed positioning of a 3rd bike on the vacant location of the rack
- Content:
  - 1 rail
  - 1 bike holder

309827	Thule Essential 3rd Rail Kit

Thule Caravan Superb 3rd Rail Kit

INFO

- Extension kit for the Thule Caravan Superb Standard bike rack
- For fixed positioning of a 3rd bike on the vacant location of the rack
- Easy mounting of the bike through a detachable bike holder with a lockable Thule AcuTight torque limiter knob that clicks when optimal torque is reached
- Content:
  - 2 short rails
  - 1 bike holder

307131	Thule Caravan Superb 3rd Rail Kit

Thule Caravan Superb XT 3rd Rail Kit Black

INFO

- Extension kit for the Thule Caravan Superb XT Standard bike rack
- For fixed positioning of a 3rd bike on the vacant location of the rack
- Easy mounting of the bike through a detachable bike holder with a lockable Thule AcuTight torque limiter knob that clicks when optimal torque is reached
- The wheel straps with pump buckles help you set up the bikes, offering comfortable fastening of the wheels
- Content:
  - 2 short rails
  - 1 bike holder

302032	Thule Caravan Superb XT 3rd Rail Kit

Thule Lift V16 3rd Rail Kit

INFO

- Extension kit for the Thule Lift V16 bike rack
- For fixed positioning of a 3rd bike on the vacant location of the rack
- Easy mounting of the bike through a detachable bike holder with a lockable Thule AcuTight torque limiter knob that clicks when optimal torque is reached
- The wheel straps with pump buckles help you set up the bikes, offering comfortable fastening of the wheels
- Content:
  - 1 rail
  - 1 bike holder

307370	Thule Lift V16 3rd Rail Kit

Thule WanderWay 3rd Rail Kit

INFO

- Extension kit for the Thule WanderWay bike rack
- For fixed positioning of a 3rd bike on the vacant location of the rack
- Easy mounting of the bike through a detachable bike holder with a lockable Thule AcuTight torque limiter knob that clicks when optimal torque is reached
- The wheel straps with pump buckles help you set up the bikes, offering comfortable fastening of the wheels
- Content:
  - 1 rail
  - 1 bike holder

911600	Thule WanderWay 3rd Rail Kit
911602	Thule WanderWay 3rd Rail Kit Black

Thule WanderWay 4th Rail Kit

INFO

- Extension kit for the Thule WanderWay bike rack
- For fixed positioning of a 4th bike on the vacant location of the rack
- Easy mounting of the bike through a detachable bike holder with a lockable Thule AcuTight torque limiter knob that clicks when optimal torque is reached
- The wheel straps with pump buckles help you set up the bikes, offering comfortable fastening of the wheels
- Content:
  - 2 short rails
  - 1 bike holder

911700	Thule WanderWay 4th Rail Kit
911702	Thule WanderWay 4th Rail Kit Black

Thule VeloSlide Fork mount Quick Release Adapter

INFO

- Adapter kit to accomodate a Thule VeloSlide in motorhome garages with limited height
- Slide-on accessory that replaces the Quick Release front wheel with a new axle hub which lowers the top point of the bikes as it replaces the front wheel of the bike
- Built-in torque limiter ensures a tight fit while preventing damage to the front fork
- Installation assist kit included for easy (dis)mounting
- Adapter holder replaces two of the original wheel fixations of the Thule VeloSlide
- Position of the bike can be adjusted easily without any tools - even while the bike is already attached to the rack
- Optional wheel bag (563000) to protect the dismounted wheel during transport
- Number of bikes: 1
- Max. loading weight: 35 kg
- Suitable for e-bikes
- Weight kit: 1,25 kg

302053	Thule VeloSlide Forkmount Adapter - Quick Release

Thule VeloSlide Fork mount Thru Axle Adapter

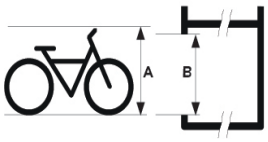

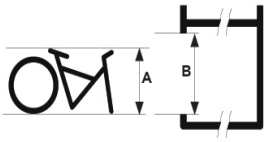

INFO

- Adapter kit to accomodate a Thule VeloSlide in motorhome garages with limited height
- Slide-on accessory which lowers the top point of the bikes as it replaces the front wheel of the bike
- Includes different spacers for optimal compatibility with the existing Thru Axle of the bike
- Installation assist kit included for easy (dis)mounting
- Adapter holder replaces two of the original wheel fixations of the Thule VeloSlide
- Position of the bike can be adjusted easily without any tools - even while the bike is already attached to the rack
- Optional wheel bag (563000) to protect the dismounted wheel during transport
- Number of bikes: 1
- Max. loading weight: 35 kg
- Suitable for e-bikes
- Weight kit: 0,90 kg

302054	Thule VeloSlide Forkmount Adapter - Thru Axle

Thule Bike Holders with AcuTight Knob

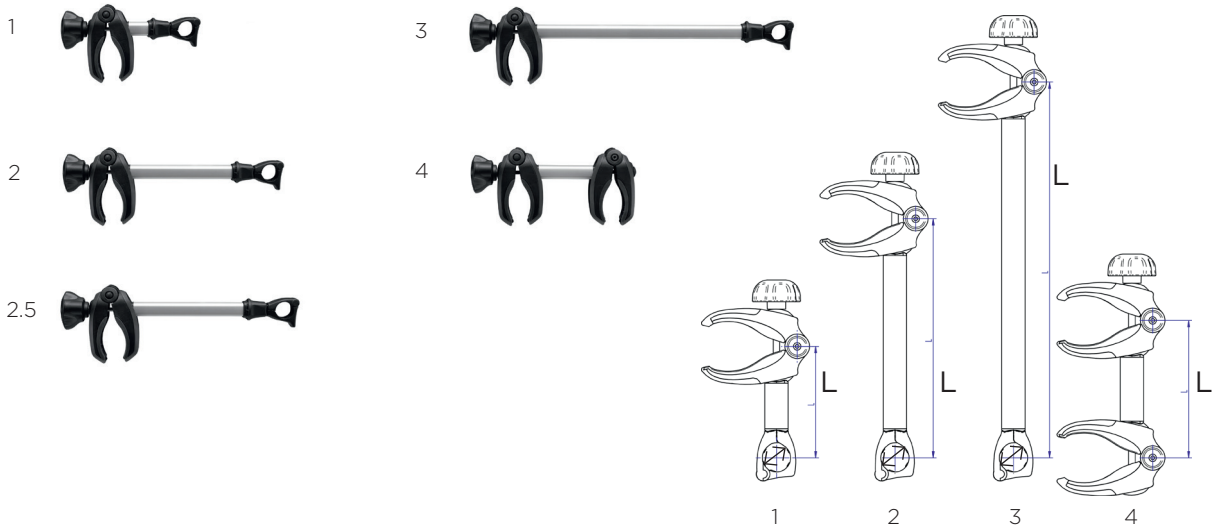

INFO

- Easy mounting of bikes through detachable bike holders with Thule AcuTight torque limiter knobs that click when optimal torque is reached
- Thule One Key compatible lock system
- For tube diameter 30mm - see ⤢ on the drawing

	Bike Holder 1 L = 122 mm	Bike Holder 2 L = 262 mm	Bike Holder 2.5 L = 300 mm	Bike Holder 3 L = 412 mm	Bike Holder 4 L = 150 mm
Thule Lift V16 Manual / Motorized	included	optional	-	included	-
Thule Excellent Standard / Short	optional	included	-	included	optional
Thule Elite G2 Standard / Short / HH	included	optional	-	included	optional
Thule Elite G2 One Bike	included	-	-	-	-
Thule Elite Van X	included	-	included	-	-
Thule Sport G2 Standard / Short	optional	optional		optional	
Thule Sport G2 Tour / Hobby / Universal	optional	optional		optional	
Thule Sport G2 Garage	optional	optional		optional	optional
Thule Sport G2 Compact	optional	optional			
Thule Essential Standard / Short	optional	optional		optional	
Thule Caravan Superb Standard	included	optional	-	included	-
Thule Caravan Superb Short V16	included	-	included	-	-
Thule Caravan Smart	included	included	-	-	-
Thule VeloSlide Standard / Short	optional				

302520	Thule Bike Holder 1 with AcuTight Knob
302521	Thule Bike Holder 2 with AcuTight Knob
302522	Thule Bike Holder 2.5 with AcuTight Knob
302523	Thule Bike Holder 3 with AcuTight Knob
302524	Thule Bike Holder 4 with AcuTight Knob

Thule Bike Holders with AcuTight Knob - Black

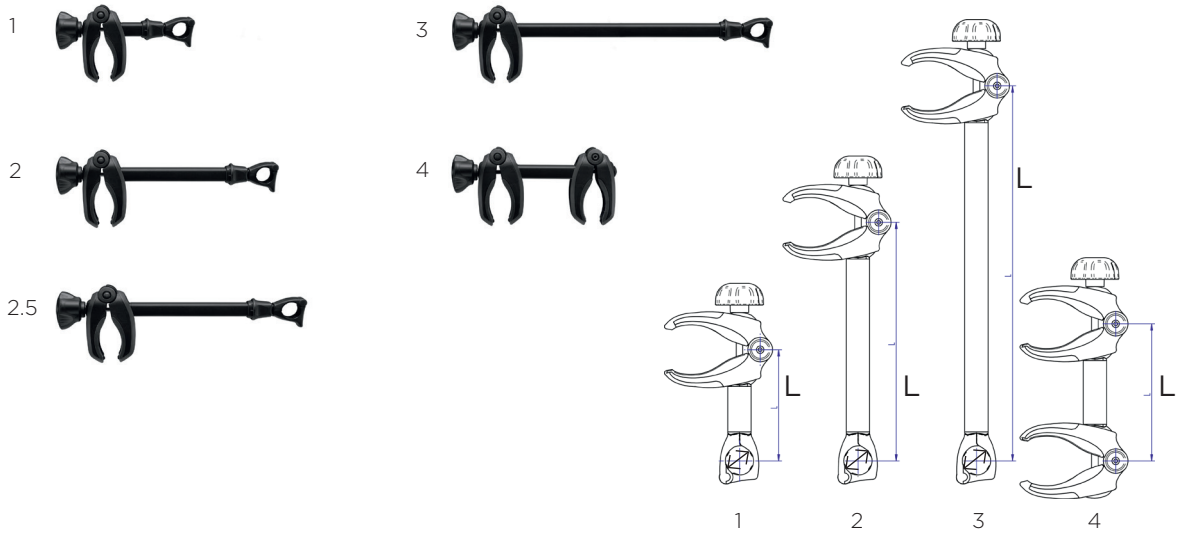

INFO

- Easy mounting of bikes through detachable bike arms with Thule AcuTight torque limiter knobs that click when optimal torque is reached
- Completely in black colour
- Thule One Key compatible lock system
- For tube diameter 30 mm - see ⤢ on the drawing

	Bike Holder 1 L = 122 mm	Bike Holder 2 L = 262 mm	Bike Holder 2.5 L = 300 mm	Bike Holder 3 L = 412 mm	Bike Holder 4 L = 150 mm
Thule Excellent Standard - Black	optional	included	-	included	optional
Thule Caravan Superb XT Standard - Black	included	-	-	included	-
Thule Caravan Superb XT Short - Black	included	-	included	-	-
Thule Elite Van XT - Black	included	-	included	-	-

302525	Thule Bike Holder 1 with AcuTight Knob - Black
302526	Thule Bike Holder 2 with AcuTight Knob - Black
302527	Thule Bike Holder 2.5 with AcuTight Knob - Black
302528	Thule Bike Holder 3 with AcuTight Knob - Black
302529	Thule Bike Holder 4 with AcuTight Knob - Black

Thule Bike Holders G1

For Thule Sport and Thule Elite bike racks

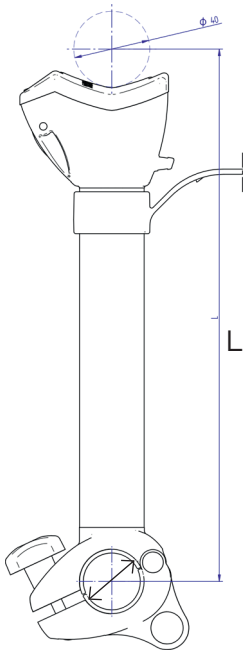

INFO

- All bike racks of the Thule G1 range are fitted with these bike holders
- Earlier models can also be fitted with bike holders
- Soft cushions make gentle contact with the bike frame
- The strap is suitable for all frame shapes
- Both ends of the bike holder can be rotated in all directions for simple fastening
- A cable lock can be attached through the eye of the bike holder to prevent theft
- For tube diameter 30mm and 34mm - see ↗↙ in the drawing on the right

• Thule Bike Holder 1	L = 14 cm	Weight: 0.3 kg
• Thule Bike Holder 2	L = 28 cm	Weight: 0.4 kg
• Thule Bike Holder 3	L = 42 cm	Weight: 0.4 kg
• Thule Bike Holder 4	L = 56 cm	Weight: 0.5 kg

308184	Thule Bike Holder 1
308185	Thule Bike Holder 2
308186	Thule Bike Holder 3
308187	Thule Bike Holder 4
308188	Thule Bike Holder 2.5 (for Omnibike Plus)

Thule AcuTight Knob

INFO
- To replace the knob of bike holders without AcuTight knob
- Has a built-in torque limiter that “clicks” when optimal hold is reached indicating correct mounting
- The controlled torque going into the bike frame prevents an under- and over-tightening of the holder
- Ergonomic soft grips
- The Thule AcuTight knob fits all Thule rear mounted bike carriers with frame holders.
- Lockable with the Thule One-Key System: use one key for all locks

528001	Thule AcuTight Knob (1 pc)

Thule One-Key System

INFO
- Set of locks, all using the same key
- Including grip-friendly Thule Comfort Key
- Replace the locks in your Thule product in a few easy steps

450400	Thule One-Key System 4-pack
450600	Thule One-Key System 6-pack
450800	Thule One-Key System 8-pack
451200	Thule One-Key System 12-pack
451600	Thule One-Key System 16-pack

Thule Bike Frame Adapter

INFO

- For easiest possible fitting of bikes with non-standard frames and ladies' bikes
- Suitable for sensitive carbon frames that need extra protection
- Mounts between saddle-post and steering
- Content:
  - 1 frame adapter

982003	Thule Bike Frame Adapter

Thule Carbon Frame Protector

INFO

- Fits all types of frame geometries and is easily adjustable with no loose parts
- The fixation pressure is distributed over a large surface area to minimize risk of frame damages
- The adapter has a soft TPE rubber liner to avoid scratching the bike frame

984101	Thule Carbon Frame Protector

Thule Brake Straps

INFO

- Extra safety for your bike
- Bind around the hand brakes of a bike when transported on a bike rack
- By pulling the brakes, sideways movement is prevented and the bikes are more secured on the rack
- Length of one strap: 46.5 cm
- Content:
  - 1 set = 6 straps

306566	Thule Brake Straps

Thule E-bike Rail for Sport G2

INFO

- Makes it possible to transport 1 e-bike on a Thule Sport G2 bike rack
- Easy-fit wheel holders (without pump buckle)
- Rail can slide left & right
- Extra long rail for e-bikes with large wheelbase (length of the rail: 1300 mm)

FEATURES

- Maximum loading weight: 30 kg
- The maximum loading weight of the original bike rack cannot be exceeded
- The Thule E-bike Rail can only be used:
  - on a rear-mounted Thule bike rack type: Sport G2 Standard + Short, Sport G2 Universal, Sport G2 Hobby, Sport G2 Tour, Essential
  - on a garage-mounted Thule bike rack: Thule Sport G2 Garage
  - to replace an existing Sport G2 V-rail
  - on the position closest to the vehicle
  - in combination with a Thule G2 bike holder

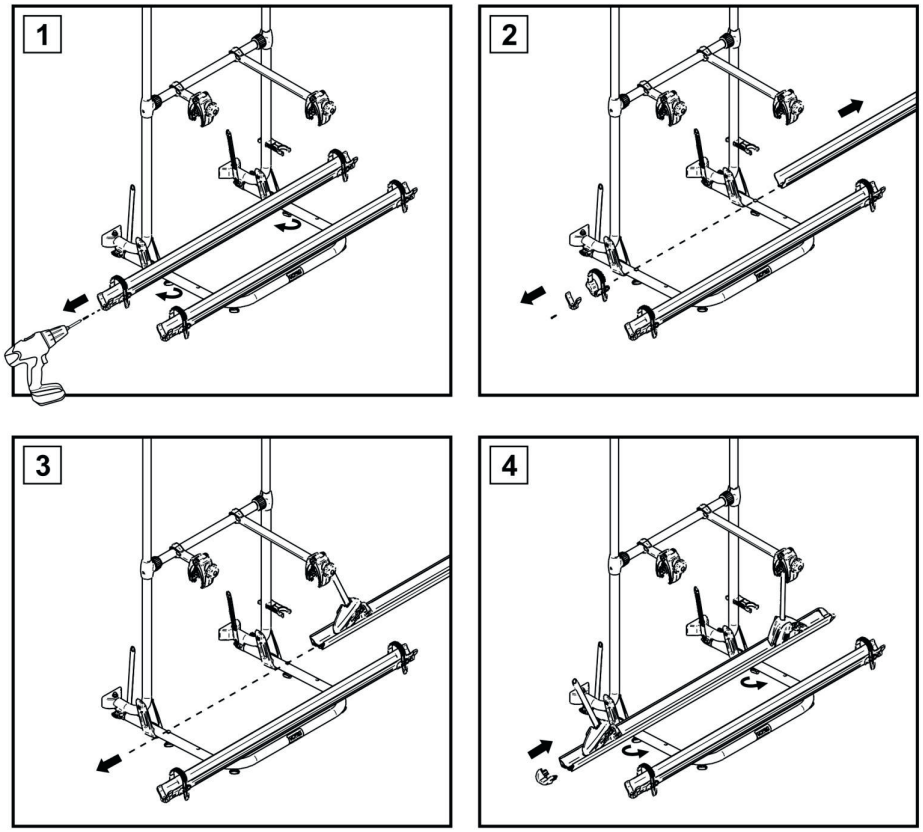

306945	Thule E-bike Rail for Sport G2

Thule Fatbike Rail Curved Ano

INFO

- A replacement bike rail that enables the transportation of one fatbike
- Fits wheel dimensions 3-5”
- Quick and easy installation
- Extra long rails
- Rails slide from left to right for optimal positioning
- The extra long straps with pump buckle tensioning system easily secure the bike wheels
- Compatible with:
  - Thule Lift V16
  - Thule Excellent Standard Ano/Black
  - Thule Excellent Short
  - Thule Elite G2 Standard
  - Thule Elite G2 Short
  - Thule Elite G2 One Bike
- Max. load: 30kg
- Weight: 1.700kg
- Dimensions:
  - Length: 1475mm
  - Height: 1200mm

302058	Thule Fatbike Rail Curved Ano

Thule Fatbike Rail Short Black

INFO

- A replacement bike rail that enables the transportation of one fatbike
- Fits wheel dimensions 3-5”
- Quick and easy installation
- Extra long rails
- Rails slide from left to right for optimal positioning
- The extra long straps with pump buckle tensioning system easily secure the bike wheels
- Compatible with:
  - Thule Caravan Superb XT Black Standard
  - Thule Caravan Superb XT Black Short
  - Thule Caravan Superb Standard
  - Thule Caravan Superb Short
- Max. load: 30kg
- Weight: 1.440kg
- Dimensions:
  - Length: 2x 575mm
  - Height: 90mm

302056	Thule Fatbike Rail Short Black

Thule Fatbike Rail Straight Black

INFO

- A replacement bike rail that enables the transportation of one fatbike
- Fits wheel dimensions 3-5”
- Quick and easy installation
- Extra long rails
- Rails slide from left to right for optimal positioning
- The extra long straps with pump buckle tensioning system easily secure the bike wheels
- Compatible with:
  - Thule Elite Van XT
  - Thule WanderWay
- Max. load: 30kg
- Weight: 1.740kg
- Dimensions:
  - Length: 1475mm
  - Height: 90mm

302057	Thule Fatbike Rail Straight Black

Thule Bike Cover

INFO

- High quality bike cover to protect your bicycles during transportation on a rear-mounted RV bike rack
- Not suitable for bike racks mounted on the A-frame, tow bar or roof top
- Not suitable for Thule bike racks for regular vehicles
- Integrated transparent sleeve for warning sign (50x50 cm)
- Made out of extra strong Ripstop polyester 210D with PU coating (3000 mm)
- Easy installation and perfect fitting thanks to elastic cords and steel hooks
- Carry bag included for clean and easy storage

307335	Thule Bike Cover - 2/3 bikes (per 15 pcs)
307336	Thule Bike Cover - 4 bikes (per 15 pcs)

Thule Cable Lock

INFO

- Strong cable with secure lock
- Coated to avoid damage to your belongings
- Two keys
- Length: 180 cm

538000	Thule Cable Lock

Thule Strap Lock

INFO

- The lightweight aluminium strap buckle has a protective cover to avoid scratches and marks
- The strap contains a highly durable steel core wire which protects against cutting
- With the Thule Strap Lock the bikes are not only extra secured during transport but they are also protected against theft
- It's possible to tighten the strap both when open and locked
- Can also be used for any other purpose when you want to secure other valuable items
- Length: 3.00 m
- Net weight: 0.390 kg
- Gross weight: 0.450 kg (incl. packaging)

307389	Thule Strap Lock (per 20 pcs)

Thule Wheel Adapter

INFO

- Special protection for the rims of road bikes and mountain bikes
- Especially recommended for high profile rims and sensitive carbon rims
- Quick and easy to install on the strap of existing wheel holders
- Suitable for straps with maximum width 24 mm and height 5 mm
- Compatibe with Thule Lift V16, Thule Excellent, Thule Elite G2, Thule Sport G2, Thule Caravan Superb, Thule Caravan Superb XT, Thule Caravan Smart, Thule Elite Van XT
- Material: rubber
- Color: black
- Content:
  - 1 set = 2 pieces

977200	Thule Wheel Adapter

Thule Rear Warning Sign

INFO

- Officially approved aluminium rear reflecting panel for protruding loads
- Mandatory in Spain, Italy, Poland and Hungary when transporting bicycles on the back of a caravan or motorhome
- 50 x 50 cm
- Compatible with the Thule Bike Cover (ref.: 307335-307336)
- 4 eyelets for installation without bike cover
- Warning: plastic imitations are not officially approved by law and by insurance companies !

Italian type

- Homologated by Italian authorities (homologation nr. 2606 DEL 13/05/13)
- Suitable for Europe, except for Spain

Spanish type

- Homologated by Spanish authorities (homologation nr. V20.065)
- Suitable for Spain, not for other European countries

307619	Thule Rear Warning Sign - Italian (per 10 pcs)
307337	Thule Rear Warning Sign - Spanish (per 10 pcs)

Thule Wheel Bag XL

INFO

- High-quality bag for the front wheel, with special padding to protect the bike wheel during transport and storage
- Strong nylon grip for convenient handling
- For wheel sizes up to 29” or 74cm in diameter

563000	Thule Wheel Bag XL

Fitting overview

Fitting overview bike carriers vs. mounting systems

mounting system		Bike carrier compatible with mounting system ?						
		Thule Excellent	Thule Elite G2	Thule Sport G2	Thule Essential	Thule Esse4	Fiamma Pro / Pro C	Fiamma UL / CL
Thule Top brackets	x2	yes std. included	yes std. included	yes std. included	yes std. included	yes std. included	yes but hooks not fully secured (*)	yes but hooks not fully secured (*)
Thule Bottom brackets	x2	yes with adapter 307338	yes with adapter 307338	yes	yes std. included	yes std. included	yes	yes
Thule Top mounting rail	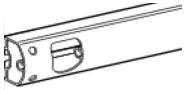	yes optional available	yes optional available	yes optional available	yes optional available	yes optional available	no unless hooks are modified (**)	no unless hooks are modified (**)
Thule Bottom mounting rail	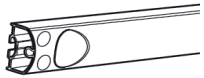	yes std. included	yes std. included	yes std. included	yes optional available	yes optional available	yes	yes
Fiamma top brackets		yes	yes	yes	yes	yes	yes std. included	yes std. included
Fiamma bottom brackets		yes with adapter 307338	yes with adapter 307338	yes	yes	yes (adapter included)	yes	yes
Fiamma bottom L- rail	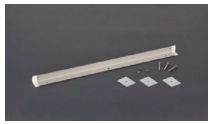	yes with adapter 307338	yes with adapter 307338	yes	yes	yes (adapter included)	yes	yes std. included
Fiamma Top mounting rail Fiamma Bottom mounting rail	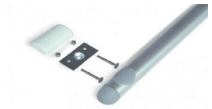	yes	yes	yes	yes	yes	yes std. included	yes
mounting range		Std. 80-150cm SV 60-80cm	Std. 80-150cm SV 50-80cm	Std. 80-150cm SV 40-70cm	Std. 80-150cm SV 40-70cm	Std. 80-150cm SV 50-80cm	Pro 80-150cm Pro M 50-80cm Pro C 40-50cm	UL 80-150cm - CL 40-50cm

(*) Fiamma hook not deep enough and not secured for upward jump
(**) Thule pin Ø 6mm, Fiamma pin Ø 5mm, Fiamma hooks need cut out to fit Thule pin

Thule Top Mounting Rail

INFO

- More flexibility for the position of the holes
- Upper mounting profile spreads the weight evenly over the panel
- Installation through the wall
- Suitable for all rear-mounted Thule RV bike racks
- Special variant for Thule Sport G2 Universal: based on the same Top Mounting Rail but extra long for the larger frame of the Thule Sport G2 Universal

309828	Thule Top Mounting Rail
307204	Thule Top Mounting Rail Universal

Thule Bottom Mounting Rail

INFO

- Spreads the weight evenly over the panel
- Installation through the wall
- All fixation material is included for installation through the wall
- Suitable for bike racks Thule Essential and Thule Esse4

306946	Thule Bottom Mounting Rail

Thule Bottom Mounting Rail for blind mounting

INFO
- Bottom mounting profile for blind mounting
- Fits all: Thule Sport G2, Thule Elite G2, Excellent, Essential
- Special version that allows installation with only screws from the outside
- When the standard mounting method cannot be mounted because of eg. bathroom or kitchen

308954	Thule Bottom Mounting Rail for blind mounting

Thule Cover for Mounting Rail

INFO
- When the bike rack is dismounted from the vehicle, the holes in the mounting rails are open for dirt and dust
- The cover is easily attached on the rail in order to cover up the holes
- Fits the Thule Bottom Mounting Rail as well as the Thule Top Mounting Rail or any other Thule Bike Rack Adapter based on the same profile
- Content:
  - 2 pieces

307328	Thule Cover for Mounting Rail

Thule Bike Rack Lift Adapter for Bottom Mounting Rail

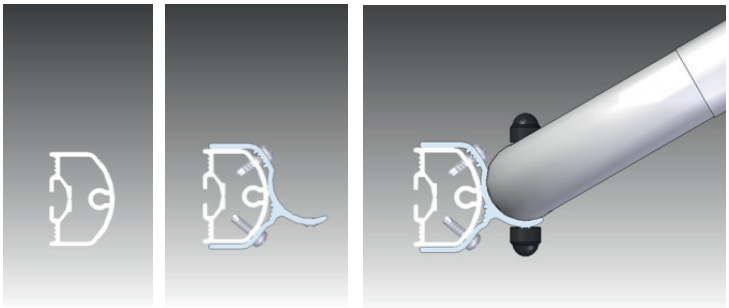

INFO

- Adapter to install a Thule Lift bike rack on a pre-mounted Thule Bottom Mounting Rail
- For example on Swift vehicles the Thule Top and Bottom mounting rails are pre-installed. However the bottom mounting rails are not compatible with the Thule Lift or Thule Lift V16 bike racks
- For the top mounting rail no adapter is needed, these are compatible with the Thule Lift and the Thule Lift V16 bike racks

FEATURES

- Suitable for bike racks: Thule Lift V16 and Thule Lift
- Content of set:
  - 1x Adapter rail for Lift
  - fasteners for installation on Bottom mounting rail

302000	Thule Bike Rack Lift Adapter for Bottom Mounting Rail

Thule Mounting Rail for Caravan Rail

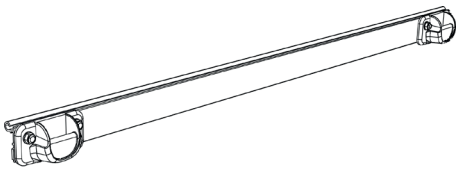

306940

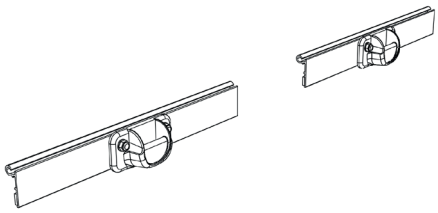

306941

INFO

- To mount a bike rack on the rear of a caravan on the rail above the window without counter plates
- Suitable for bike racks: Thule Excellent, Thule Elite G2 and Thule Sport G2

306940	Thule Mounting Rail for Caravan Rail - 1 full length rail (per 10 pcs)
306941	Thule Mounting Rail Caravan Rail - 2 pcs of 16 cm (per 10 sets)

Thule Bike Rack Adapter Hymer Top Brackets

INFO

- Adapter set to mount a Thule G2 bike rack on Hymer vehicles with pre-fixation points
- Quick and easy to install
- Complete installation can be done from the outside of the vehicle
- No need for an extra fixation set from Hymer
- Suitable for Thule Excellent, Thule Elite G2 and Thule Sport G2 bike racks
- The optional Thule Bottom Mounting Rail for blind mounting is not included (ref. 308954)
- Content:
  - Top Mounting Brackets for Hymer vehicles

302007	Thule Bike Rack Adapter Hymer Top Brackets (per 5 sets)

Thule Bike Rack Adapter for Curved Walls

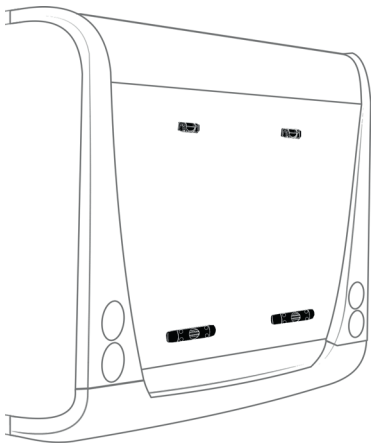

INFO

- Adapter set to mount a standard Thule G2 bike rack on vehicles with a slightly curved rear wall
- Bottom mounting rails are suitable for blind installation or installation with counter plates
- Suitable for Thule Excellent, Thule Elite G2 and Thule Sport G2 bike racks
- Content:
  - 2x Bottom Mounting Rail for curved walls
  - 2x Standard Top Mounting Brackets

306931	Thule Bike Rack Adapter for Curved Walls

Thule Lift V16 Elongation Kit

INFO

- Makes it possible to extend the mounting range of the Thule Lift V16 bike rack to 95-150 cm
- Suitable for Thule Lift V16 bike racks (ref. 307368-307369)

307371	Thule Lift V16 Elongation Kit

Thule Bike Rack Adapter for Dethleffs, Carado & Sunlight

INFO

- Adapter set to mount a Thule bike rack on the rear wall of a Dethleffs, Carado or Sunlight motorhome or caravan
- These vehicles all have a specific cover profile on top. This adapter makes it easy to mount the Thule top wall brackets, included with the Thule bike rack on this cover profile without the need for mounting plates on the inside
- The adapter is an aluminum profile cut to length and foreseen with all needed holes to fix each top wall bracket with 4 screws in the strong structure behind the cover profile
- The adapter is officially approved by Dethleffs, Carado and Sunlight
- Suitable for Thule bike racks: Thule Excellent, Thule Elite G2, Thule Sport G2, Thule Lift V16, Thule Essential
- Content of set:
  - 2x adapter plate
  - screws for wall fixation
  - fixation material for Thule wall brackets

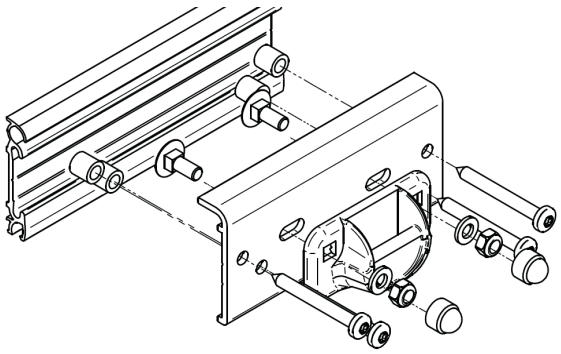

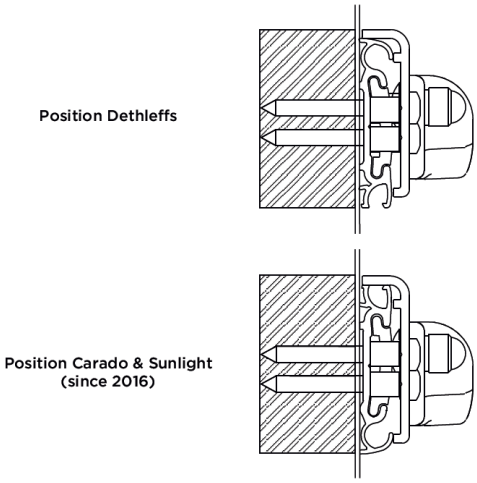

302002	Thule Bike Rack Adapter for Dethleffs, Carado & Sunlight (per 5 sets)

Thule Adapter 4 Point Fixation Fiamma

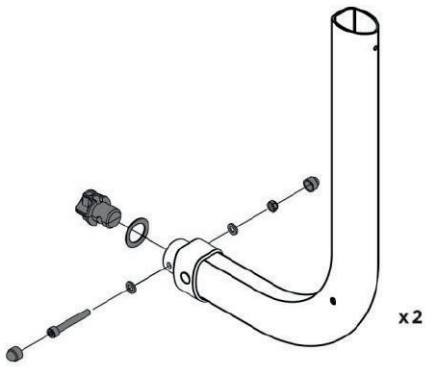

INFO

- Adapter set to mount a Thule Excellent | Elite G2 bike rack on Fiamma brackets (4 point fixation)
- Useful for customers who have pre-mounted Fiamma fixations on their vehicle and who want to replace a Fiamma bike rack by the Thule Excellent | Elite G2 bike rack. To do this, the lower part of the bike rack frame must be equipped with the adapter

307338	Thule Adapter 4 Point Fixation Fiamma (per 5 sets)

Thule XL U-bolts for A-frame bike racks

INFO

- Adapter set to mount a Thule A-frame bike rack on caravans with high BPW chassis (for example: Adria 2016 Alpina caravans)
- Installation can be done by following the normal instructions included with the bike rack
- Suitable for all Thule A-frame bike racks: Thule Caravan Superb Standard/Short, Thule Caravan Smart, Thule Caravan Light
- Content of set:
  - 4 extra-long U-bolts M6 x 160-78-160mm

308140	Thule XL U-bolts for A-frame bike racks (per 5 sets)

Thule U-Bolts A-Frame AL-KO Vario X

INFO

- Adapterset to mount a Thule A-frame bike rack on the AL-KO Vario X frame
- This bike rack adapter is sold per set of 4 u-bolts.

302068	Thule U-Bolts A-Frame AL-KO Vario X

Thule Eriba Bracket

INFO

- For mounting a bike rack to an Eriba caravan

308137	Thule Eriba Bracket for mounting on Eriba (per 5 sets)

Thule Rail Support Bracket for Hobby Caravan Rail < 2003

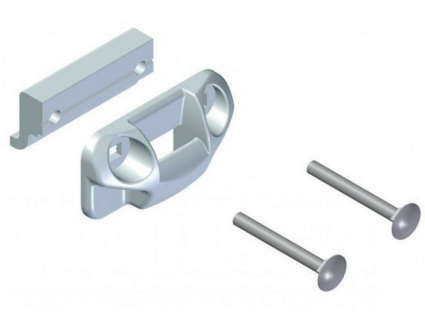

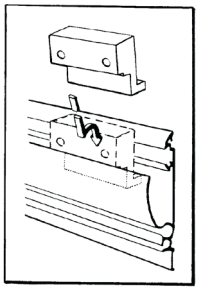

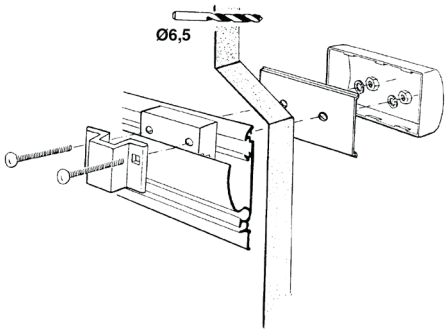

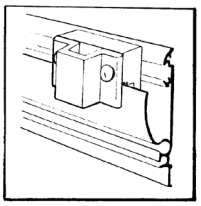

308147	Thule Rail Support Bracket for Hobby Caravan Rail < 2003 (per 10 sets)

Thule Bike Rack Adapter for Hobby 2014 Caravans

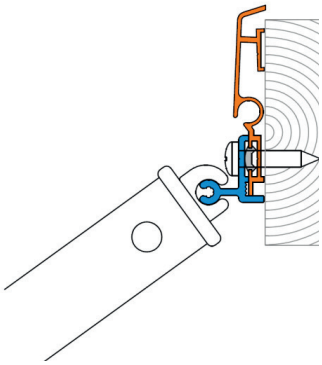

INFO

- Mounting rail to install a Thule bike rack on Hobby 2014 caravans (models: De Luxe, Excellent, Prestige - not for models: De Luxy Easy, Premium and Landhaus)
- On these Hobby caravans, the advised position at the rear for installing a bike rack is on the cover profile below the brake light. This is the strongest and most reliable position because of the wood structure behind it. Below the brake light there is no risk of damaging any electric cables
- The mounting rail is designed in cooperation with Hobby to perfectly fit this position and can be screwed on the cover profile without removing the rubber
- To be used in combination with Thule Sport G2 Hobby bike rack (ref.: 307128)
- Rail length: 715mm
- Content:
  - 10x mounting rail for Hobby 2014

307174	Thule Bike Rack Adapter for Hobby 2014 Caravans (per 10 pcs)

Thule Bike Rack Adapter for Hobby 2015 Caravans

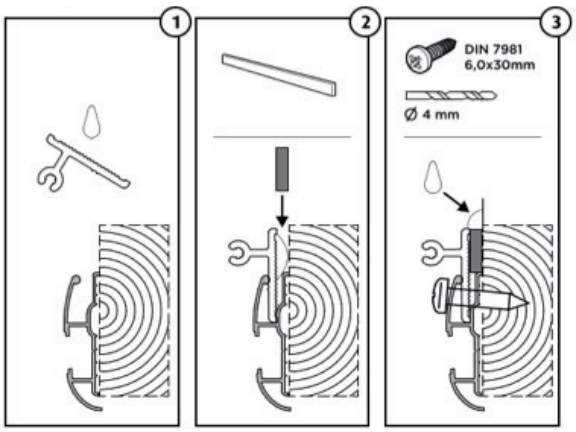

INFO

- Adapter to install a Thule Sport G2 Hobby bike rack on Hobby Caravans as from 2015
- These Caravans have a special rail and limited space above the rear window which makes it impossible to install the standard Thule Sport G2 Hobby bike rack
- The adapter is a rectangular aluminum profile cut to length
- To install the bike rack, the mounting profile included with the Thule Sport G2 Hobby needs to be mounted upside down in the Hobby rail. The adapter perfectly fits the gap between the mounting rail and the vehicle
- This Thule adapter is officially approved by Hobby Wohnwagenwerk
- For Hobby Caravans that are standard equipped with the Thule bike rack by Hobby Wohnwagenwerk this adapter is not needed because a cut out is made in the Hobby rail
- The Thule Adapter for Hobby Caravans 2014 (ref.: 307174) cannot be used due to the shape of the new Hobby rail and the brake light in the center
- To be used in combination with Thule Sport G2 Hobby bike rack (ref.: 307128)
- Adapter profile dimensions: length 715mm, height 15mm, thickness 5mm
- Content:
  - 10x adapter rail for Hobby caravans as from 2015

307330	Thule Bike Rack Adapter for Hobby 2015 Caravans (per 10 pcs)

Steps

MOTORISED STEPS	
Fit Guide - Thule Slide-Out Step	226
Thule Slide-Out Step G2 12V	228
Thule Slide-Out Step G2 12V Ducato | Jumper | Boxer Euro 6D	230
Thule Slide-Out Step G2 12V Crafter 2017	232
Thule Single Step V15 12V	234
Thule Single Step Compact 12V	236
Thule Double Step 12V	238

ACCESSORIES FOR MOTORISED SLIDE-OUT STEPS	
Thule Relay Kit for Step 12V	240
Thule Control Box for Step 12V	240
Thule LED Kit for Slide-Out Step	241
Mounting Kit for Thule Slide-Out G2 12V	242

MANUAL STEPS	
Thule Single Step Manual	244
Thule Slide-Out Step Manual	246

Fit Guide - Thule Slide-Out Step G2

		Fiat Ducato Peugeot Boxer Citroën Jumper Opel Movano > 2022	Volkswagen Crafter > 2017	Mercedes Sprinter FWD > 2017	Mercedes Sprinter RWD / 4WD 05 / 2006 - Volkswagen Crafter 05 / 2006- 2017	Renault Master Opel Movano < 2022	Ford Transit FWD New	Ford Transit AWD New
		From Q3 2021						
Step	400	**301841** Thule Slide-Out Step 12V G2 DuJubo 400	**301844** Thule Slide-Out Step 12V G2 Crafter 2017 400		**301838** Thule Slide-Out Step 12V G2 400			
Step	550	**301842** Thule Slide-Out Step 12V G2 DuJubo 550	**301845** Thule Slide-Out Step 12V G2 Crafter 2017 550	**301845** Thule Slide-Out Step 12V G2 Crafter/Sprinter 2017 550	**301839** Thule Slide-Out Step 12V G2 550			
Step	700	**301843** Thule Slide-Out Step 12V G2 DuJubo 700	**301846** Thule Slide-Out Step 12V G2 Crafter 2017 700		**301840** Thule Slide-Out Step 12V G2 700			
Installation kit		**301877** Thule Installation Kit Slide-Out Step 12V G2 Ducato Jumper Boxer	**301878** Thule Mounting Kit for Slide-Out Step 12V G2 Crafter 2017 - 400/700		**301881** Thule Mounting kit for Slide-Out Step 12V G2 for Sprinter RWD/4WD and Crafter < 2017	**301882** Thule Mounting kit for Slide-Out Step 12V G2 for Master 2010	**301883** Thule Mounting kit for Slide- Out Step 12V G2 for Transit FWD < 2014	
Installation kit			**301879** Thule Mounting Kit for Slide- Out Step 12V G2 Crafter 2017 - 550	**301885** Thule Mounting Kit for Slide- Out Step 12V G2 Crafter/ Sprinter 2017 550 for Sprinter FWD			**301898** Thule Mounting kit for Slide- Out Step 12V G2 for Transit FWD ≥ 2014	**301899** Thule Mounting Kit for Slide- Out Step 12V G2 Transit AWD ≥ 2014

Fit Guide - Thule Slide-Out Step G2 - On Pallet/Gitter box*

Step	Fiat Ducato Peugeot Boxer Citroën Jumper Opel Movano > 2022	Volkswagen Crafter > 2017	Mercedes Sprinter FWD > 2017	Mercedes Sprinter RWD / 4WD 05 / 2006 - Volkswagen Crafter 05 / 2006-2017	Renault Master Opel Movano < 2022	Ford Transit FWD (New)	Ford Transit AWD (New)
	From Q3 2021						
400	**301850** Thule Slide-Out Step G2 12V DuJubo 400 On Pallet			**301847** Thule Slide-Out Step G2 12V 400 On Pallet 20**			
	301851 Thule Slide-Out Step G2 12V DuJubo 400 N/A On Pallet						
550	**301852** Thule Slide-Out Step G2 12V DuJubo 550 On Pallet	**301857** Thule Slide-Out Step G2 12V Crafter 2017 550 On Pallet	**301860** Thule Slide-Out Step G2 12V Sprinter FWD 550 On Pallet	**301848** Thule Slide-Out Step G2 12V 550 On Pallet 20**		**301848** Thule Slide-Out Step G2 12V 550 On Pallet 20**	
	301855 Thule Slide-Out Step G2 12V DuJubo 550 Full Rail On Pallet					**303200** Thule Slide-Out Step G2 12V Transit FWD ≥ 2014 550 On Pallet 20	
700	**301853** Thule Slide-Out Step G2 12V DuJubo 700 On Pallet	**301858** Thule Slide-Out Step G2 12V Crafter 2017 700 On Pallet		**301849** Thule Slide-Out Step G2 12V 700 On Pallet 20**	**303203** Thule Slide-Out Step G2 12V Master & Movano < 2022 700 On Pallet 20	**301849** Thule Slide-Out Step G2 12V 700 On Pallet 20**	**303202** Thule Slide-Out Step G2 12V Transit AWD ≥ 2014 700 On Pallet 20
	301854 Thule Slide-Out Step G2 12V DuJubo 700 N/A On Pallet					**303201** Thule Slide-Out Step G2 12V Transit FWD ≥ 2014 700 On Pallet 20	
	301856 Thule Slide-Out Step G2 12V DuJubo 700 Full Rail On Pallet						

* Only for manufacturers

**Mounting kit not included; see page 36

Thule Slide-Out Step G2 12V

INFORMATION

- Motor / Manual 12V Motor
- Material Corrugated anodised aluminium

USP'S

- Reduced weight
- Stronger and more reliable Slide-Out Step
- Better integration of the Slide-Out Step on the vehicle
- Easy and toolless removal of the footboard

FEATURES

- The load capacity exceeds by far the European norm 2001/85/EG (RV DIN EN 1646-1)
- Smart and stable installation
- Easy manual activation without tools in case of power failure
- Conformity with EC Norm 74/485/EEG: no sharp edges at front side
- Patented cable outlet + hook allowing more protection and flexibility during installation
- Better protection for dust infiltration: integrated brushes, cable outlet, lip profile
- Anti-slip security with safety walk
- A switch for the connection of an optional warning lamp or relay in the vehicle is supplied as standard, making it impossible to drive away with the step still out
- Conform to the EMC and CE standards
- Accessory: retrofit and integrated LED solution

DIMENSIONS

Type	Step width	Total width	Weight
400	407 mm	452 mm	5.8 kg
550	552 mm	597 mm	6.6 kg
700	707 mm	752 mm	7.7 kg

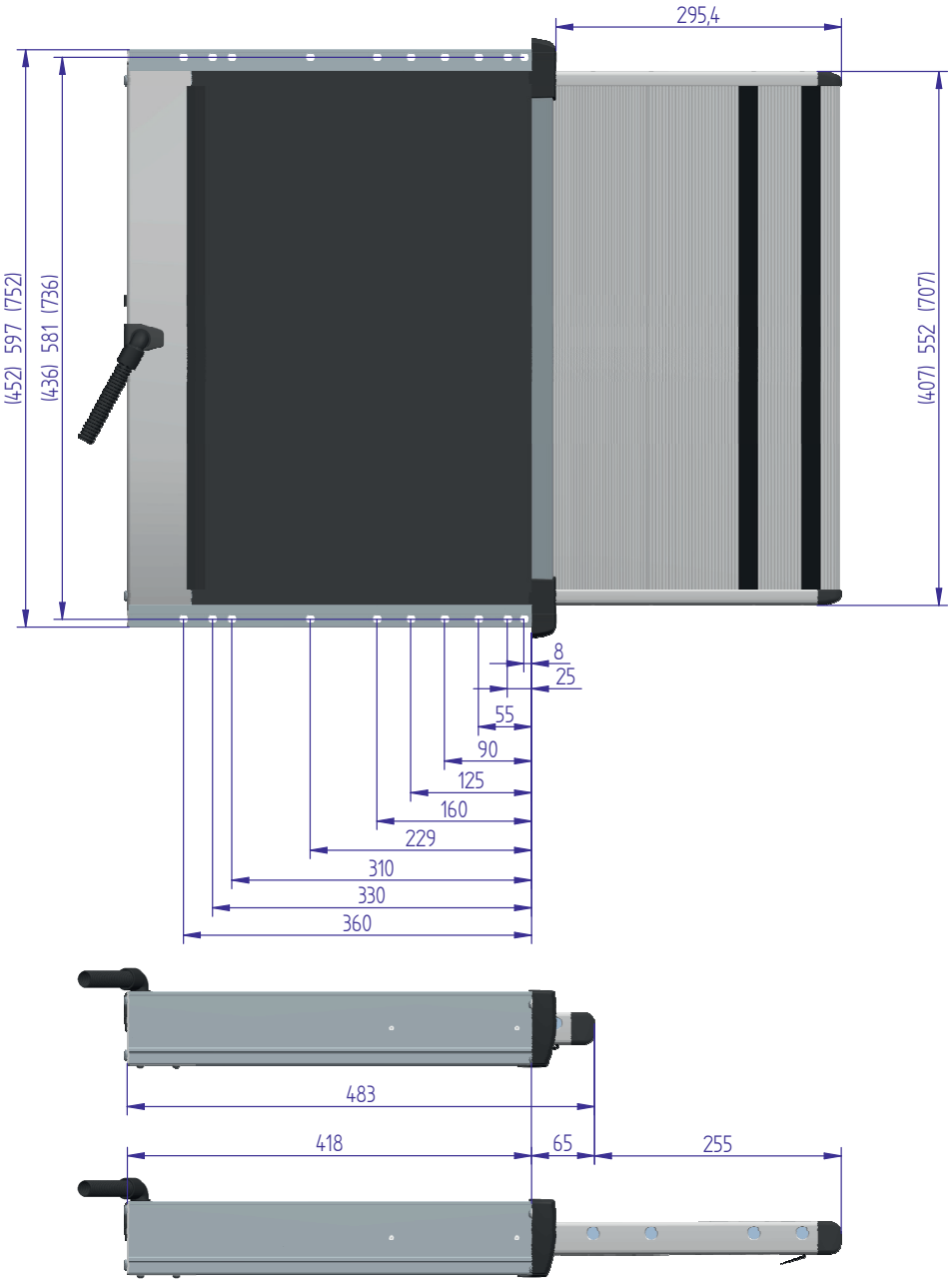

ACCESSORIES

- Thule Relay Kit for Step 12V
- Thule Control Box for Step 12V
- Thule LED Kit for Slide-Out Step

301838	Thule Slide-Out Step G2 12V 400mm - single packed with switch
301839	Thule Slide-Out Step G2 12V 550mm - single packed with switch
301840	Thule Slide-Out Step G2 12V 700mm - single packed with switch

Thule Slide-Out Step G2 12V

Ducato | Jumper | Boxer Euro 6D

INFO

- Motor / Manual 12V Motor
- Material Corrugated anodised aluminium

USP'S

- Euro 6D compatible and reduced in weight
- Stronger and more reliable Slide-Out step
- Better integration of the Slide-Out Step on a van
- Easy and toolless removal of the footboard

FEATURES

- The load capacity exceeds by far the European norm 2001/85/EG (RV DIN EN 1646-1)
- Smart and stable installation on a Ducato, Jumper or Boxer van
- Easy manual activation without tools in case of power failure
- Conformity with EC Norm 74/485/EEG: no sharp edges at front side
- Patented cable outlet + hook allowing more protection and flexibility during installation
- Better protection for dust infiltration: integrated brushes, cable outlet, lip profile
- Anti-slip security with safety walk
- A switch for the connection of an optional warning lamp or relay in the vehicle is supplied as standard, making it impossible to drive away with the step still out
- Conform to the EMC and CE standards
- Accessory: Retrofit and integrated LED solution

DIMENSIONS

Type	Step width	Total width	Distance between the fixation parts	Weight
400	407 mm	452 mm	300 +- 1.5 mm	5.8 kg
550	552 mm	597 mm	445 +- 1.5 mm	6.5 kg
700	707 mm	752 mm	600 +- 1.5 mm	7.5 kg

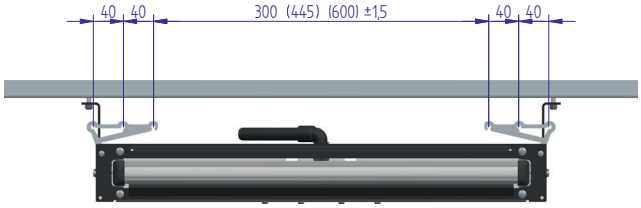

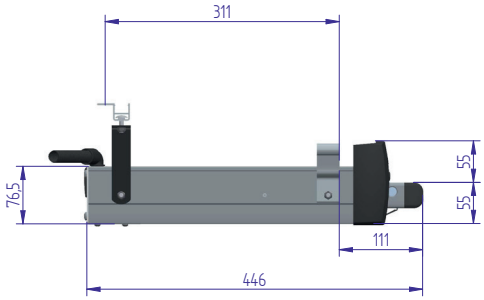

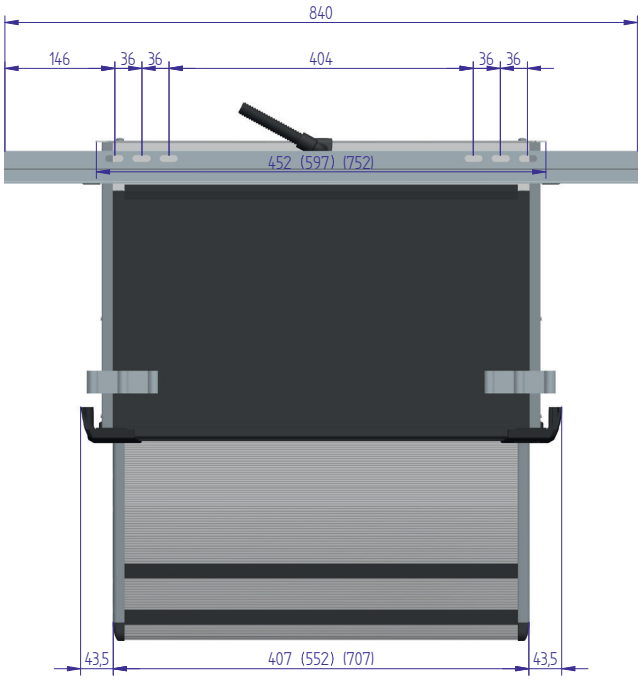

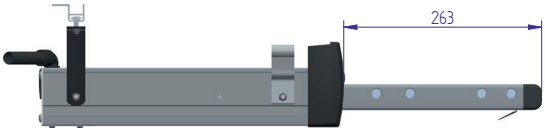

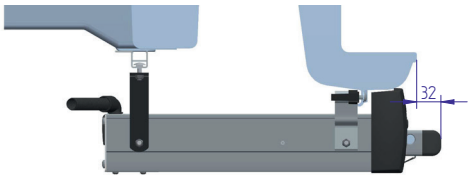

ACCESSORIES

- Thule Relay Kit for Step 12V
- Thule Control Box for Step 12V
- Thule LED Kit for Slide-Out Step

301841	Thule Slide-Out Step G2 12V Ducato | Jumper | Boxer 400
301842	Thule Slide-Out Step G2 12V Ducato | Jumper | Boxer 550
301843	Thule Slide-Out Step G2 12V Ducato | Jumper | Boxer 700

Thule Slide-Out Step G2 12V

Crafter 2017

INFORMATION

- Motor / Manual 12V Motor
- Material Corrugated anodised aluminium

USP'S

- Reduced weight
- Stronger and more reliable Slide-Out Step
- Better integration of the Slide-Out Step on the vehicle
- Easy and toolless removal of the footboard

FEATURES

- The load capacity exceeds by far the European norm 2001/85/EG (RV DIN EN 1646-1)
- Smart and stable installation on a Volkswagen Crafter Van from 2017 onwards
- Easy manual activation without tools in case of power failure
- Conformity with EC Norm 74/485/EEG: no sharp edges at front side
- Patented cable outlet + hook allowing more protection and flexibility during installation
- Better protection for dust infiltration: integrated brushes, cable outlet, lip profile
- Anti-slip security with safety walk
- A switch for the connection of an optional warning lamp or relay in the vehicle is supplied as standard, making it impossible to drive away with the step still out
- Conform to the EMC and CE standards
- Accessory: retrofit and integrated LED solution

DIMENSIONS

Type	Step width	Total width	Weight
400	407 mm	452 mm	5.8 kg
550	552 mm	597 mm	6.5 kg
700	707 mm	752 mm	7.5 kg

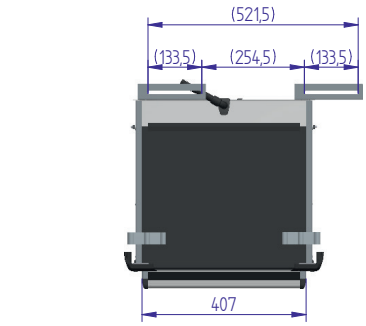

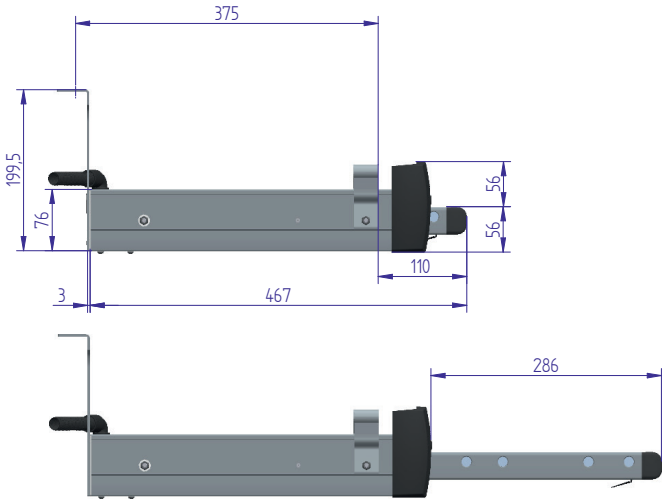

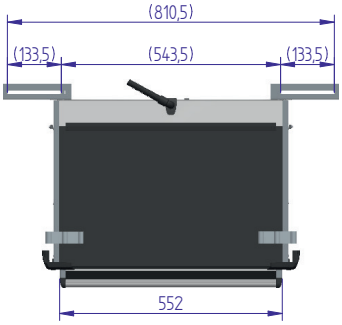

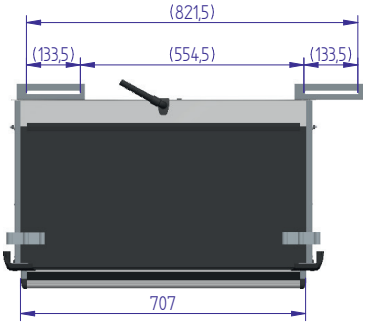

ACCESSORIES

- Thule Relay Kit for Step 12V
- Thule Control Box for Step 12V
- Thule LED Kit for Slide-Out Step

301844	Thule Slide-Out Step G2 12V Crafter 400
301845	Thule Slide-Out Step G2 12V Crafter 550
301846	Thule Slide-Out Step G2 12V Crafter 700

Thule Single Step V15 12V

Type 460 & 550 Alu

INFO

- Motor / Manual 12V Motor
- Width 460 mm - 550 mm
- Weight 4.5 kg - 4.8 kg
- Material Corrugated anodised aluminium, frame block galvanised steel

FEATURES

- Conform to the EMV and CE standards. The formulated quality standards exceed European standard EN1646
- A switch for the connection of an optional warning lamp in the vehicle is supplied as standard, making it impossible to drive away with the step still out

DIMENSIONS

Type	Step width	Total width	Distance between the fixation parts	Weight
460	456 mm	453 mm	436 mm +- 2 mm	4.5 kg
550	552 mm	549 mm	532 mm +- 2 mm	4.8 kg

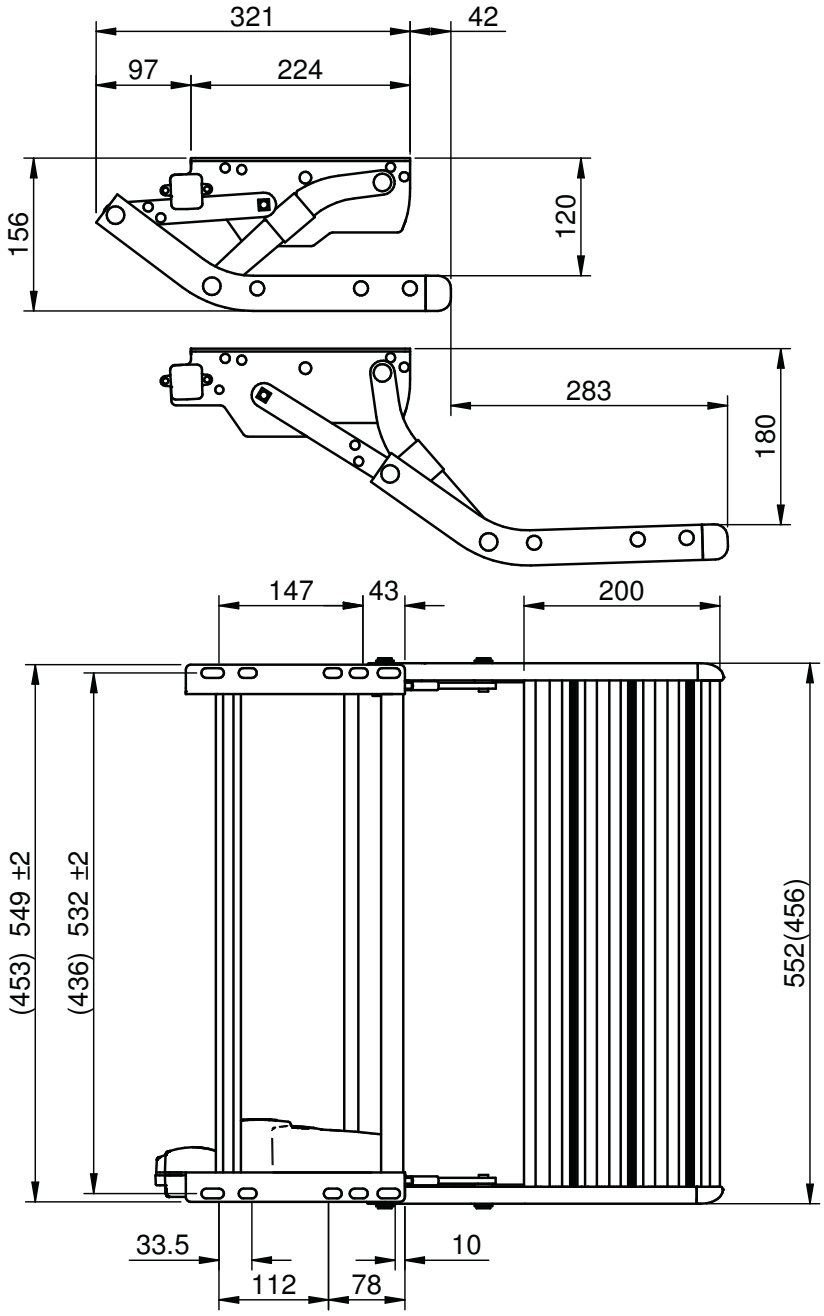

ACCESSORIES

- Thule Relay Kit for Step 12V
- Thule Control Box for Step 12V

309969	Thule Single Step V15 12V - 460
309968	Thule Single Step V15 12V - 550

Thule Single Step Compact 12V

INFORMATION

- Motor / Manual 12V Motor
- Material Corrugated anodised aluminium
- Width 500 mm
- Weight 5.1 kg

USP'S

- Compact step underneath the vehicle
- Weight of only 5.1 kg
- Improved stability under light and heavy loads up to 300 kgs

FEATURES

- Addition of a compact model in the Thule Single Step product line-up
- Noise reduction during opening and closing of the step
- Better stability under load accomplished by reinforcements and design optimizations
- Conform to the EMV and CE standards. The formulated quality standards exceed European standards EN1646
- A switch for the connection of an optional warning lamp in the vehicle is supplied as standard, making it impossible to drive away with the step still out
- Accessories: Thule Relay Kit for Step 12V, Thule Control box for Step 12V

DIMENSIONS

Type	Step width	Total width	Distance between the fixation parts	Weight
500	495 mm	500 mm	475 mm +- 2 mm	5.1 kg

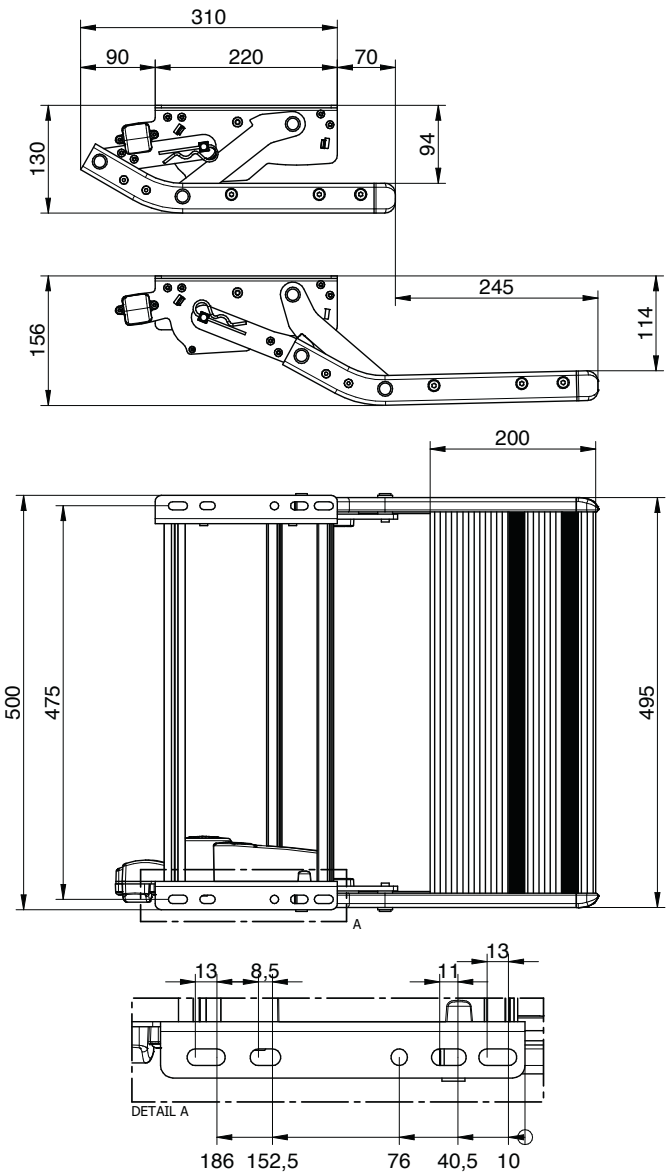

ACCESSORIES

- Thule Relay Kit for Step 12V
- Thule Control Box for Step 12V

301888	Thule Single Step Compact 12V 500
301889	Thule Single Step Compact 12V OP
301890	Thule Single Step Compact 12V GB20

Thule Double Step 12V

Type 380, 440 & 500 Alu

INFO

- Motor / Manual — Motor
- Width — 380 mm - 440 mm - 500 mm
- Weight — 7 kg - 7.3 kg - 7.6 kg
- Material — Corrugated anodised aluminium

FEATURES

- Conform to the EMV and CE standards. The formulated quality standards exceed European standard EN1646
- A switch for the connection of an optional warning lamp in the vehicle is supplied as standard, making it impossible to drive away with the step still out

DIMENSIONS

Type	Step width	Total width	Distance between the fixation parts	Weight
380	380 mm	435 mm	410 mm +- 2 mm	7 kg
440	446 mm	501 mm	476 mm +- 2 mm	7.3 kg
500	502 mm	557 mm	532 mm +- 2 mm	7.6 kg

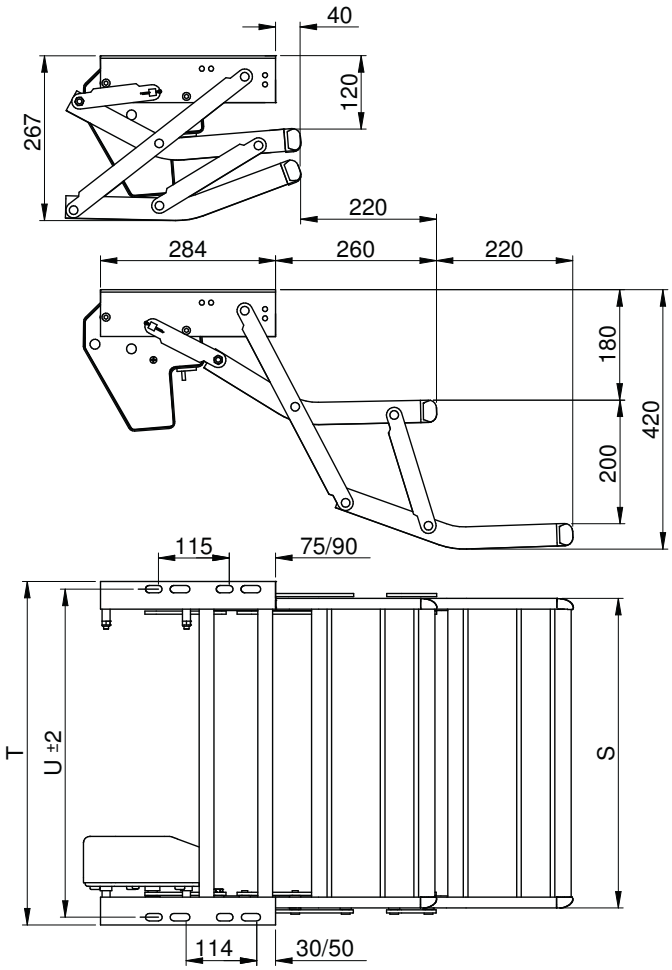

ACCESSORIES

- Thule Relay Kit for Step 12V
- Thule Control Box for Step 12V

307571	Thule Double Step 12V - 380
307572	Thule Double Step 12V - 440
307579	Thule Double Step 12V - 500

Thule Relay Kit for Step 12V

INFO

- Electronic relay kit for all Thule 12V entry steps
- Designed to connect to your vehicle battery to guarantee that the 12V step automatically closes when the motor starts to prevent you from driving away with the step still out

308200	Thule Relay Kit for Step 12V

Thule Control Box for Step 12V

INFO

- For automatic retraction of any Thule 12V entry step when starting the engine
- The step will open and close automatically together with the vehicle's door for optimal comfort
- Connect to a selector switch which allows you to open the step permanently so you don't need to open and close the step every time

308812	Thule Control Box for Step 12V

Thule LED Kit for Slide-Out Step G2 12V

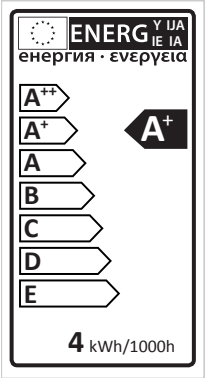

USP'S

- Integrated and protected LED for optimal visibility of the footboard
- Retrofit: can be installed on Thule Slide-Out Step V12 12V, Thule Slide-Out Step V18 12V, Thule Slide-Out Step V19 12V Ducato | Jumper | Boxer and Thule Slide-Out Step V19 12V Crafter 2017

FEATURES

- IP67: protected for dust infiltration and the effects of immersion in water to 1 meter
- 2 kits available:
  - for the Thule Slide-Out Steps Standard 12V (V12/V18)
  - for the Thule Slide-Out Step V19 12V Ducato | Jumper | Boxer | Crafter
- Endcaps and aluminium front profile depend on type of step
- Content:
  - 2 endcaps
  - front profile (670 mm)*
  - quick fit lens (670 mm)*
  - brush pile (670 mm)*
  - LED Strip (670 mm)*

  *For a 700 mm step. Cut to 515 mm for a 550 mm step. Cut to 370 mm for a 400 mm step

301477	Thule LED Kit for Slide-Out Step Standard 12V
301867	Thule LED Kit for Slide-Out Step G2 12V - Ducato | Jumper | Boxer | Crafter

Mounting Kit for Thule Slide-Out Step G2 12V

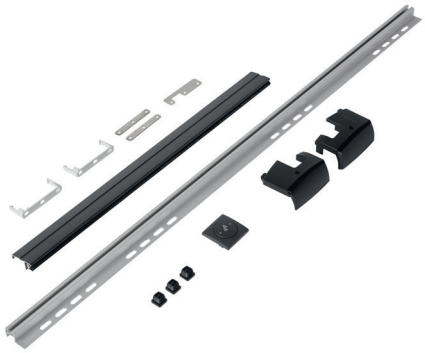

301877	Mounting Kit for Thule Slide-Out Step G2 12V - Ducato | Jumper | Boxer | Euro 6D-Temp

301878	Mounting Kit for Thule Slide-Out Step G2 12V - Crafter 2017 - 400/700

301879	Mounting Kit for Thule Slide-Out Step G2 12V - Crafter 2017 - 550

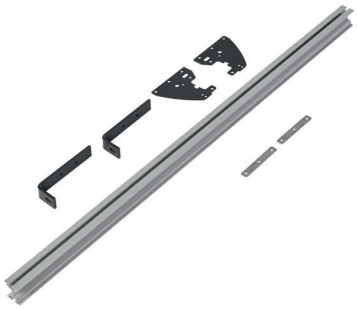

301880	Mounting Kit for Thule Slide-Out Step G2 12V - Ducato < 2006

301881	Mounting Kit for Thule Slide-Out Step G2 12V - Sprinter > 05/2006 4WD/RWD | Crafter 05/2006-2017

301885	Mounting Kit for Thule Slide-Out Step G2 12V - Sprinter > 2017 FWD - 550

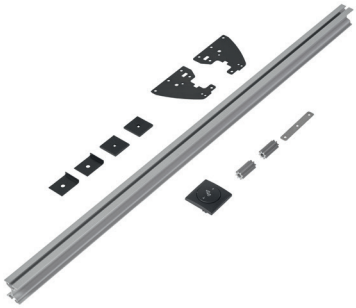

301882	Mounting Kit for Thule Slide-Out Step G2 12V - Master > 2010

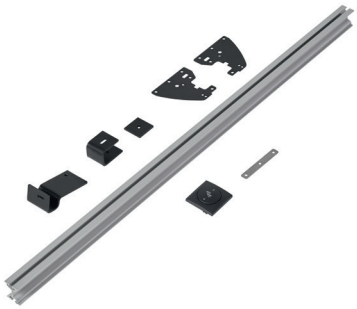

301883	Mounting Kit for Thule Slide-Out Step G2 12V - Transit < 2015

301898	Mounting Kit for Thule Slide-Out Step G2 12V - Transit ≥ 2014 FWD

301899	Mounting Kit for Thule Slide-Out Step G2 12V - Transit ≥ 2014 AWD

Thule Single Step V10 Manual

Type 550 Alu

INFO

- Motor / Manual — Manual
- Width — 550 mm
- Weight — 4.1 kg
- Material — Corrugated anodised aluminium

FEATURES

- A switch for the connection of a warning lamp in the vehicle is supplied as standard, making it impossible to drive away with the step still out

DIMENSIONS

Type	Step width	Weight
550	552 mm	4.1 kg

308766	Thule Single Step V10 Manual - 550

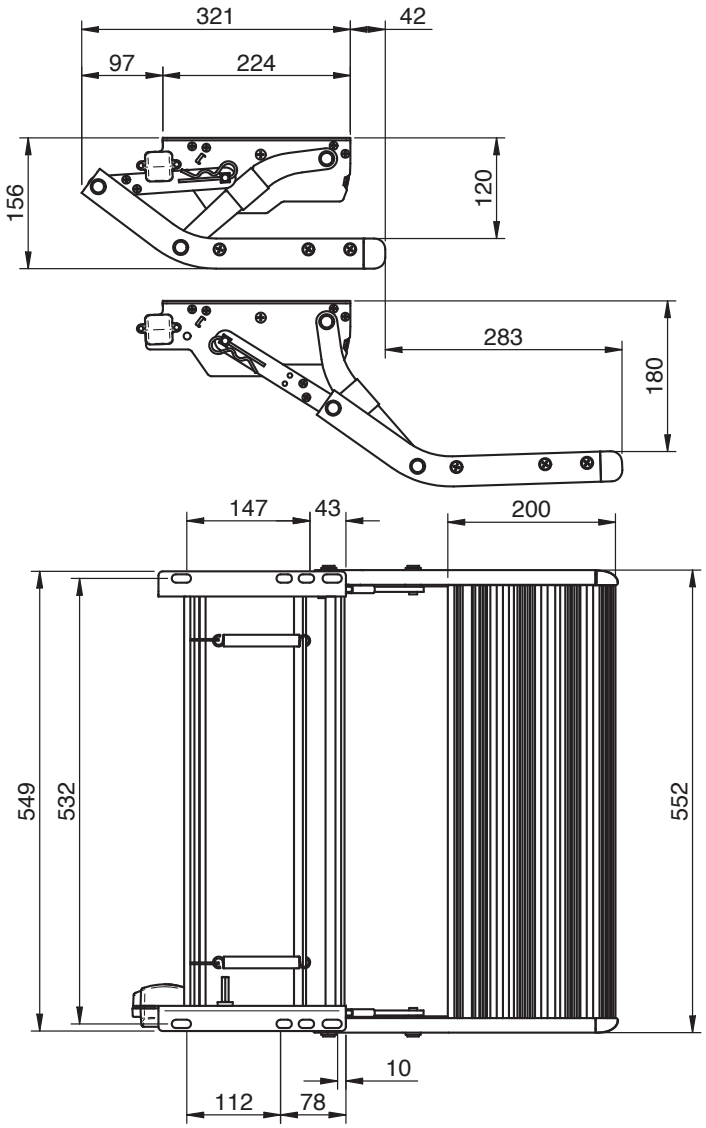
321
42
97
224
156
120
283
180
147
43
200
549
532
552
10
112
78

Thule Slide-Out Step Manual

Type 400 Alu

INFO

- Motor / Manual — Manual
- Width — 400 mm
- Weight — 4.7 kg
- Material — Corrugated anodised aluminium

FEATURES

- Locked in closed position
- Installation brackets: different heights: 9/35/62/88 mm

WARNING

- Not suitable for installation at the cabin door of the vehicle

DIMENSIONS

Type	Step width	Total width	Weight
400	406 mm	485 mm	4.7 kg

307564	Thule Slide-Out Step Manual - 400

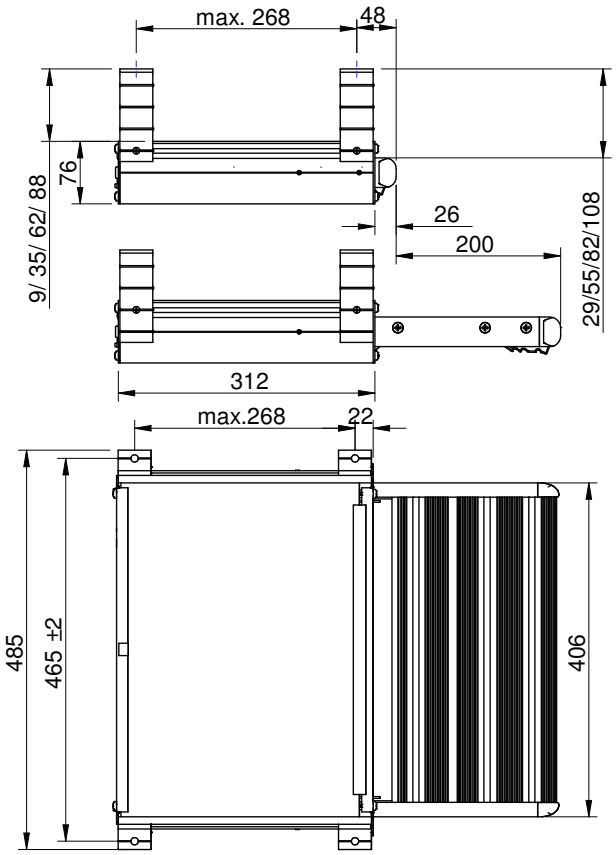
485
465 ±2
max.268
22
312
9/ 35/ 62/ 88
76
max. 268
48
26
200
29/55/82/108
406

Vents

Practical for fresh and healthy air

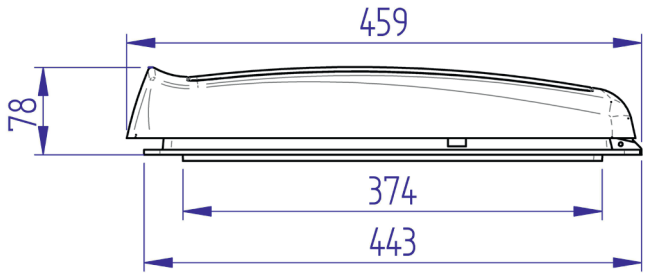

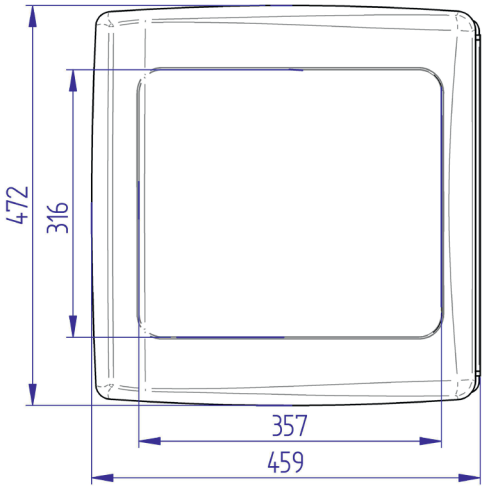

FEATURES

- Easy to use
- Drill-free installation: clamping system
- Manual or motorised (12V)
- Various dome designs:
  - white = opaque
  - translucent = milk, frosted effect
- Retrofit ventilator kit
- Weight manual vent: 3 kg
- Weight motorised vent: 4.5 kg
- All materials are made of impact and weather-resistant plastics
- Mosquito screen on the outside of the vent to keep dirt and vermin out
- Security: in addition to 12 ventilation speeds, the Thule Vent has an energy-saving function, a boost function, and a safety mechanism to prevent excess voltage, incorrect connection and blockage

white

INFO ROOF LIGHT

Aperture size	400 mm x 400 mm
Inner frame	458 mm x 426 mm
Height (closed)	78mm
Roof thickness	25mm - 60 mm
Max. opening angle	40°
Material dome white	Polypropylene
Material dome translucent	Polypropylene
Material inner frame	Polystyrene
Material curtain frame	ABS
Material outer frame	ASA
Free Air Flow	100 cm^2

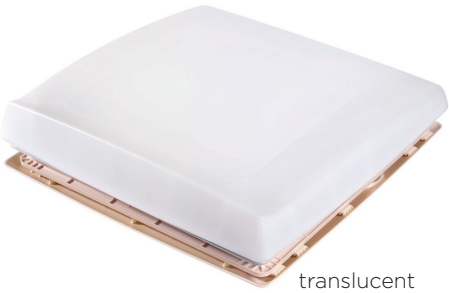

translucent

INFO VENTILATOR

Consumption Thule Vent 12V	0.15 A - 2.50 A
Max. air flow	20 m^3 / min.
Diameter ventilator	300 mm

200004	Thule Vent - White	3 kg
200016	Thule Vent - Translucent	3 kg
200063	Thule Vent 12V - White	4.5 kg
200061	Thule Vent 12V - Translucent	4.5 kg
308226	Thule Additional Kit Roof 40-60mm	/
308229	Thule Retrofit Inner Frame	/
211001	Thule Ventilator 12V Kit	1.6 kg

USE OF VENTILATOR

- The ventilator is started by the soft switch S2. The middle LED light lights up and the ventilator starts in comfort mode, this is the lowest speed (extract).
- By pushing on the switch S1 (extract) or S3 (intake), the airflow can be adjusted in 6 steps.
  - MIN = 3,7 m^3/min. (2 W - 0,15 A)
  - MAX = 20 m^3/min. (34 W – 2,50 A)
- In order to save the battery, the speed drops from position 6 to the lowest position after one hour of use.
- It is possible to allow the ventilator to work for 5 minutes on the highest speed (boost). To do this push for 3 seconds on the button S1 (extraction) or S2 (intake). After 5 minutes the ventilator returns to its previous speed setting. See table.
- For reasons of security, the ventilator stops when the tension is too high (19,5V) or too low (11,1V) or when the fan is blocked. For trouble shooting see fig.

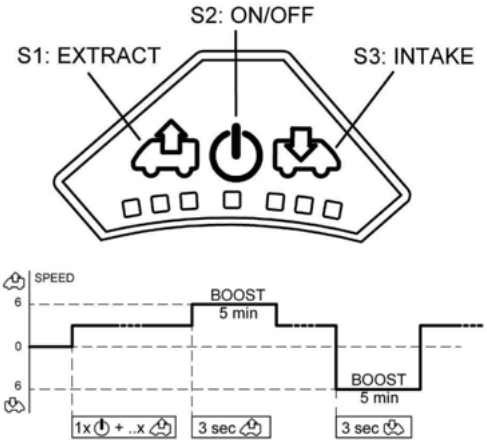

PUSH BUTTOMS	LIGHTS	SPEED	Ampère	Watt
	■ ■ ■ ■ ■ ■ ■	0	0,2 mA	2,4 mW
1x	■ ■ ◐ ☼ ■ ■ ■	1⇧	0,15 A	2 W
1x + 1x	■ ■ ☼ ☼ ■ ■ ■	2⇧	0,35 A	5 W
1x + 2x	■ ◐ ☼ ☼ ■ ■ ■	3⇧	0,65 A	9 W
1x + 3x	■ ☼ ☼ ☼ ■ ■ ■	4⇧	1,20 A	17 W
1x + 4x	◐ ☼ ☼ ☼ ■ ■ ■	5⇧	1,70 A	24 W
1x + 5x	☼ ☼ ☼ ☼ ■ ■ ■	6⇧	2,50 A	34 W
1x + 5x + 1x	◐ ☼ ☼ ☼ ■ ■ ■	5⇧		
1x + 5x + 2x	■ ☼ ☼ ☼ ■ ■ ■	4⇧		
••• ••• •••				
1x	■ ■ ■ ■ ■ ■ ■	0	0,2 mA	2,4 mW

PUSH BUTTOMS	LIGHTS	SPEED	Ampère	Watt
	■ ■ ■ ■ ■ ■ ■	0	0,2 mA	2,4 mW
1x	■ ■ ◐ ☼ ■ ■ ■	1⇧	0,15 A	2 W
1x + 1x	■ ■ ■ ☼ ■ ■ ■	0	15 mA	0,2 W
1x + 2x	■ ■ ■ ☼ ◐ ■ ■	1⇩	0,15 A	2 W
1x + 3x	■ ■ ■ ☼ ☼ ■ ■	2⇩	0,30 A	5 W
1x + 4x	■ ■ ■ ☼ ☼ ◐ ■	3⇩	0,50 A	9 W
••• ••• •••				

VENTILATOR WITH SUPPLEMENTARY SWITCH
- If an external thermostat or proximity switch (with time-delay relay with normal closed contact) is connected, you can turn the ventilator on or off with the switch S2 and choose the direction and speed with the switch S1 or S3. The ventilator will only work when the external thermostat or proximity switch is activated.
- Remark: If you will be away from the vehicle for a long period we suggest that you set the fan at a low speed level when using the thermostat. This will reduce the possibility of draining the battery.

MAINTENANCE
The ventilator grid can be removed for cleaning, as well as the mosquito screens. Always shut down the current with the main switch.

TRANSPORTING THE CARAVAN WITH A THULE VENT
The roof light is only waterproof in the direction of the traffic. When transporting the caravan in the opposite direction, or when the back of the caravan is up, ensure the dome is watertight by using the 'Lock-unlock' (not supplied on a ventilator version) or by using something that ensures that the dome remains closed when being transported.

TROUBLE SHOOTING

FLASHING LED's	PROBLEM
■ ■ ■ ☼ ■ ■ ■	or Tension < 11,1 V or Tension > 19,5V
☼ ■ ■ ■ ■ ■ ☼	Motor blocked
■ ■ ☼ ■ ☼ ■ ■	Motor not connected

UNIFORM PROVISIONS CONFORMITY ROOFLIGHTS

Transparant	Translucent White		
✗	✗	M_1	
✗	⚠	M_1	
✗	✗	M_2 M_3	9+
✗	✓	N	
✗	✓	O	

✗	not compliant
✓	compliant
n.a.	not applicable
⚠	mounting restriction

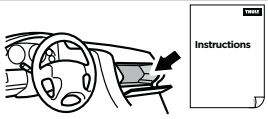

		TRANSPARANT		TRANSLUCENT		WHITE	
REGULATION	VEHICLE CATEGORY	MANUAL	VENTILATOR	MANUAL	VENTILATOR	MANUAL	VENTILATOR
UN R.43	M N O	✗	✗	n.a.	n.a.	n.a.	n.a.
UN R.26	M_1			✓	✓	✓	✓
UN R.10	M N O			n.a.	✓	n.a.	✓
UN R.21	M_1			⚠	⚠	⚠	⚠
UN R.118	M_3			✗	✗	✗	✗

1 UN R.43 (SAFETY GLAZING MATERIALS)

VEHICLE CATEGORY	TRANSPARANT		TRANSLUCENT		WHITE	
	Manual	Ventilator	Manual	Ventilator	Manual	Ventilator
M, N, O	✗	✗	n.a.	n.a.	n.a.	n.a.

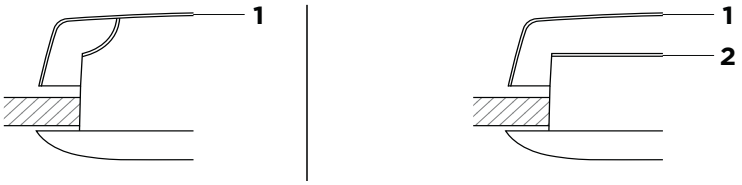

2 UN R.26 (EXTERNAL PROJECTIONS)

VEHICLE CATEGORY	TRANSPARANT		TRANSLUCENT		WHITE	
	Manual	Ventilator	Manual	Ventilator	Manual	Ventilator
M_1			✓	✓	✓	✓

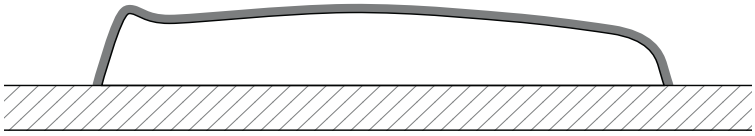

3 UN R.10 (ELECTROMAGNETIC COMPATIBILITY)

VEHICLE CATEGORY	TRANSPARANT		TRANSLUCENT		WHITE	
	Manual	Ventilator	Manual	Ventilator	Manual	Ventilator
L, M, N, O			n.a.	✓	n.a.	✓

4 UN R.21 (INTERIOR FITTINGS)

VEHICLE CATEGORY	TRANSPARANT		TRANSLUCENT		WHITE	
	Manual	Ventilator	Manual	Ventilator	Manual	Ventilator
M_1			⚠	⚠	⚠	⚠

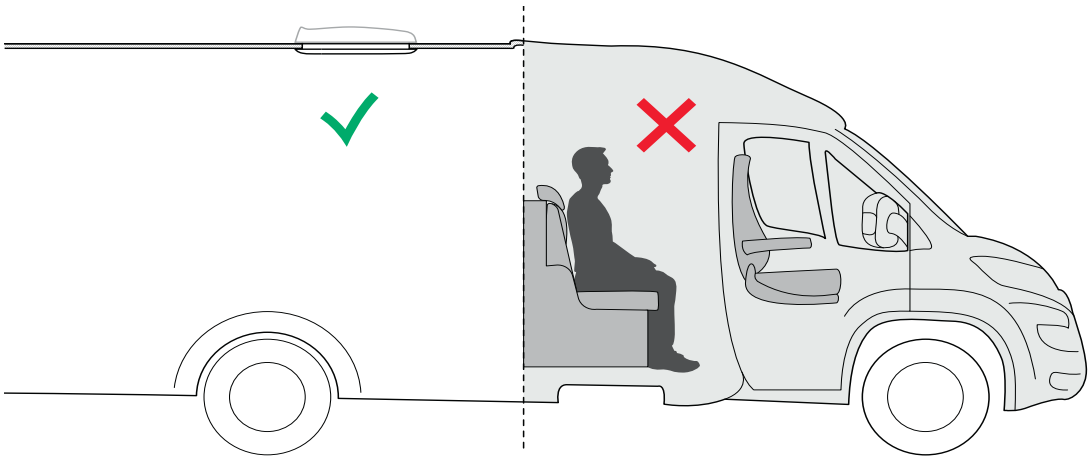

5 UN R.118 (BURNING BEHAVIOR OF INTERIOR MATERIALS)

VEHICLE CATEGORY	TRANSPARANT		TRANSLUCENT		WHITE	
	Manual	Ventilator	Manual	Ventilator	Manual	Ventilator
M_3			✕	✕	✕	✕

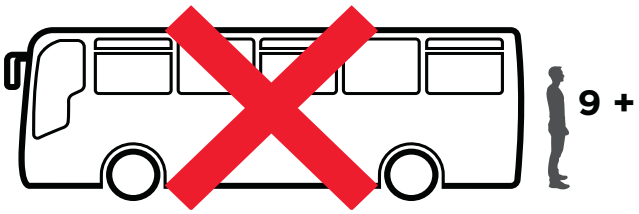

Storage

ORGANIZERS	
Thule Wall Organizer	256
Thule Shoe Organizer	257
Thule Countertop Organizer	258
Thule Trash Bin	259
Thule Toiletry Kit	260
Thule Go Box	261
Thule Garage Organizer	262

FIXATION	
Thule POD 2.0	263
Thule Strap Kit for Organizers	265
Thule POD 1.0	267

Thule Wall Organizer

INFO

- Material 100% polyester
- Colour Black, grey, blue combination
- Dimensions 50 cm L x 85 cm H

FEATURES

- Storage compartments: 14 pockets, 2 extra mesh pockets, 2 elastic cords on the side for paper towels
- Integrated cover with zipper to protect your items during transport. Can remain open for easy access
- Easy to carry thanks to the built-in handle
- Strong, durable and weather-resistant
- Foldable for compact storage when not being used
- 2 velcro straps and 2 corner grommets offer a variety of options for fixation on the outer wall of vehicles, on garage doors or anywhere you want, both on the in- or outside of vehicles

FIXATION

- Thule POD 2.0 306804
- Thule POD 1.0 307620
- Thule Strap Kit for Organizers 307124
- Thule Ladder Fixation Kit 301405

306924	Thule Wall Organizer

Thule Shoe Organizer

INFO

- Material 100% polyester
- Colour Black, grey, blue combination
- Dimensions 50 cm L x 80 cm H

FEATURES

- Storage compartments: 10 large pockets for shoes, 2 extra mesh pockets
- Integrated cover with zipper to protect your shoes during transport and. Can remain open for easy access
- Contains small ventilation holes for optimal ventilation
- Easy to carry thanks to the built-in handle
- Strong, durable and weather-resistant
- Foldable for compact storage when not being used
- 2 velcro straps and 2 corner grommets offer a variety of options for fixation on the outer wall of vehicles, on garage doors or anywhere you want, both on the in- or outside of vehicles

FIXATION

- Thule POD 2.0 306804
- Thule POD 1.0 307620
- Thule Strap Kit for Organizers 307124
- Thule Ladder Fixation Kit 301405

306925	Thule Shoe Organizer

Thule Countertop Organizer

INFO

- Material 100% polyester
- Colour Black, grey, blue combination
- Dimensions 90 cm L x 40 cm H

FEATURES

- Storage compartments: 5 mesh pockets, 14 elastic loops, 1 pen holder, 2 paper towel holders
- Strong, durable and weather-resistant
- Foldable for compact storage when not being used
- 2 velcro straps and 2 corner grommets offer a variety of options for fixation on the outer wall of vehicles, on garage doors or anywhere you want, both on the in- or outside of vehicles

FIXATION

- Thule POD 2.0 306804
- Thule POD 1.0 307620
- Thule Ladder Fixation Kit 301405

306926	Thule Countertop Organizer

Thule Trash Bin

INFO

- Material 100% polyester
- Colour Black, grey, blue combination
- Dimensions 35 cm L x 35 cm W x 70 cm H

FEATURES

- A handy zipper at the bottom makes it easy to remove
- All contact surfaces are smooth and maintenance friendly
- Suitable for plastic trash bags of 50 litres
- Closable with foldable lid on top
- Foldable for compact storage when not being used
- Rigid metal frame
- Strong, durable and weather-resistant
- Can be mounted on a POD 1.0 on the outer wall of the vehicle, on the garage door or anywhere you want on the in- or outside of vehicles

FIXATION

- Thule POD 1.0 307620

306927	Thule Trash Bin

Thule Toiletry Kit

INFO

• Material	100% polyester
• Colour	Black, grey, blue combination
• Dimensions when closed	35 cm L x 40 cm H
• Dimensions when opened	35 cm L x 120 cm H

FEATURES

- Storage compartments: 13 different compartments and a dedicated compartment for first-aid items
- Detachable mirror with a practical velcro connection
- Easy to carry thanks to the handle on top
- Closable with a zipper
- Strong, durable and weather-resistant, waterproof material inside
- Foldable for compact storage when not being used
- Strong L-shaped hook to fit over a door/wall, on a door handle, on a POD,...

FIXATION

• Thule POD 2.0	306804
• Thule POD 1.0	307620
• Thule Strap Kit for Organizers	307124

306928	Thule Toiletry Kit

Thule Go Box

INFO

• Material	100% polyester
• Colour	Black, grey, blue combination
• Dimensions Medium	61 cm L x 36 cm W x 30 cm H
• Dimensions Large	61 cm L x 46 cm W x 30 cm H

FEATURES

- Storage compartments: 2 main compartments and 3 side pockets
- Available in two sizes
- Perfect to store all kinds of things in your motorhome, caravan garage or in the trunk of the car
- Take the Thule Go Box for a picnic on the beach or to go shopping
- Strong, durable, weather-resistant, maintenance friendly
- No installation required
- Foldable for compact storage when not being used
- Water-resistant cover included

306929	Thule Go Box - Medium
306930	Thule Go Box - Large

Thule Garage Organizer

INFO

- The set includes:
  - rails (2x)
  - buttons (6x)
  - straps (2x)
  - cargo net (1x)
- Gross weight: 4.20 kg
- Net weight: 3.80 kg
- Dimensions: 11 x 14 x 10 cm

FEATURES

- Universal railing kit & accessories for optimizing space efficiency in the vehicle's garage
- Easy-to-use tensioning system & cargo net to safely secure items during transport
- Base profiles (2.00 m) screwed to the vehicle wall
- Expandable with extra Thule Garage Organizer items
- Compatible with all Thule Cargo Management accessories

302510	Thule Garage Organizer
302511	Thule Garage Organizer - Rail Kit (2 pcs)
302513	Thule Garage Organizer - Button (6 pcs)
302515	Thule Garage Organizer - Straps (2 pcs)
302516	Thule Garage Organizer - Net

Thule POD 2.0

INFO

- Material — UV-resistant plastic
- Colour — White
- Dimensions — 55 mm L x 12 mm W x 30 mm H
- Maximum load — 10 kg/POD

FEATURES

- Compact and discreet design
- Easy to install
- Mounted with 2 screws and/or glue
- Cover included
- For in- or outdoor application
- Can be installed on the outside of a RV wall, on the inside of a garage or on the garage door, on interior cabinets, on a bed board,... or anywhere at home
- Content:
  - 2 pieces

306804	Thule POD 2.0

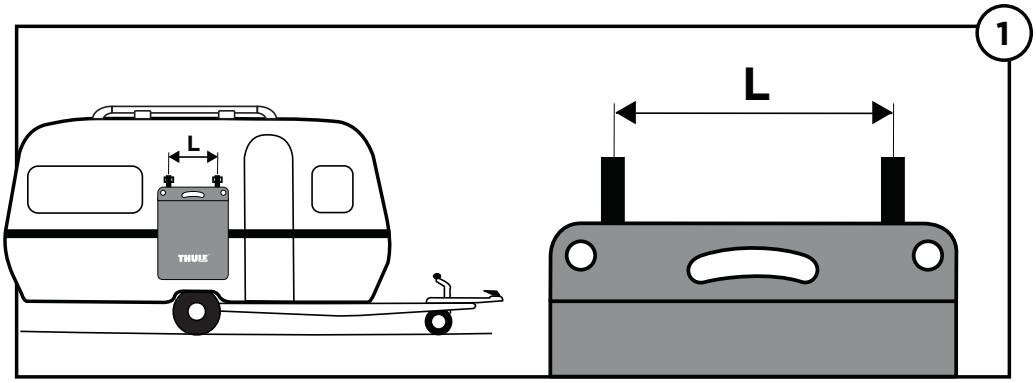
1
L
L
THULE

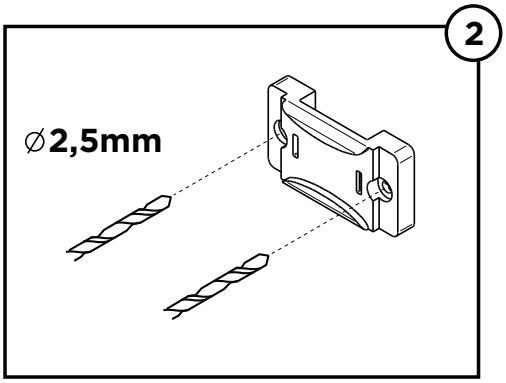
2
∅2,5mm

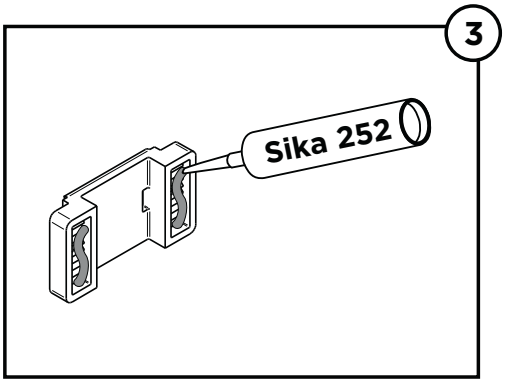
3
Sika 252

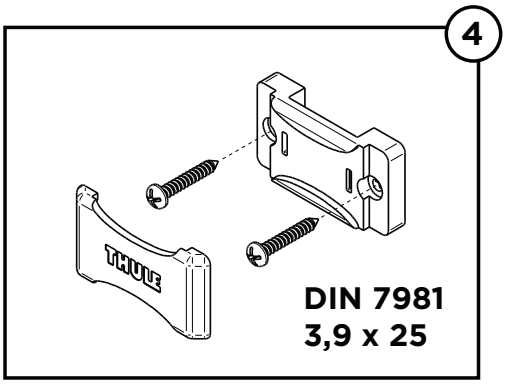
4
THULE
DIN 7981
3,9 x 25

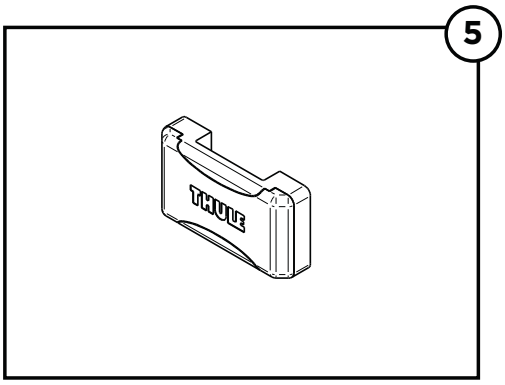
5
THULE

Thule Strap Kit for Organizer

INFO

- Colour Black
- Strap length 1.20 m
- Maximum load 10 kg/strap

FEATURES

- Fits in the caravan rail or the front lead rail of an awning
- Quick release system
- Adjustable in height
- Organizers can be installed with the complete strap or directly on the rail attachments
- Content:
  - 2 pieces

307124	Thule Strap Kit for Organizers

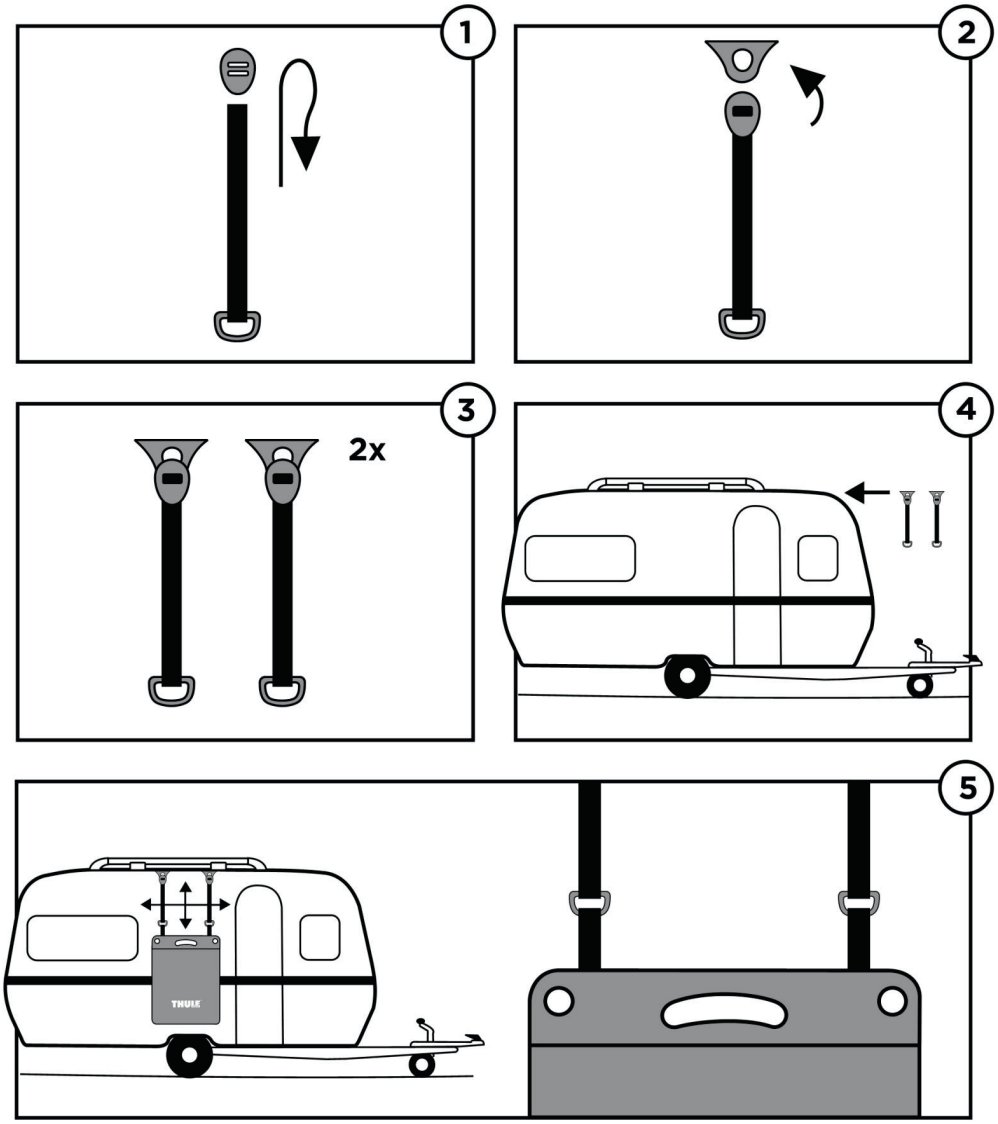
1
2
3
2x
4
5
THULE

Thule POD 1.0

INFO

- Material — Fiberglass-reinforced, UV-resistant nylon with a stainless steel pin
- Colour — White
- Dimensions — 88 mm L x 44 mm W x 52 mm H

FEATURES

- Easy and safe way to connect accessories to the wall
- Mounted with 2 screws and metal plate for glue
- For heavy-duty use (e.g. in combination with the Thule Trash Bin)
- Includes a cover for a discrete look when not in use
- For in- or outdoor application
- Can be installed on the outside of a RV wall, on the inside of a garage or on the garage door, on interior cabinets, on a bed board,... or anywhere a home
- Content:
  - 2 pieces

307620	Thule POD 1.0

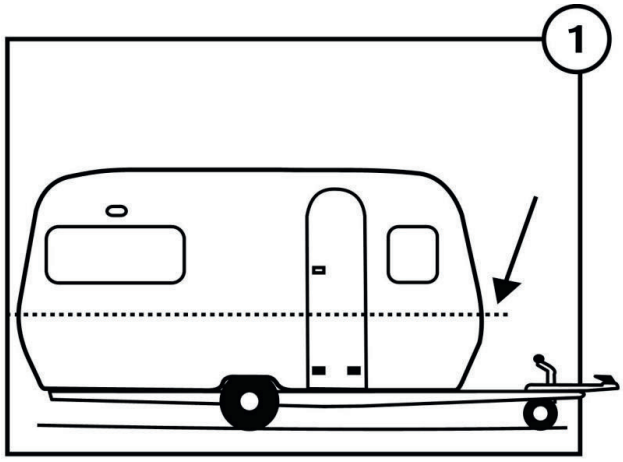
1

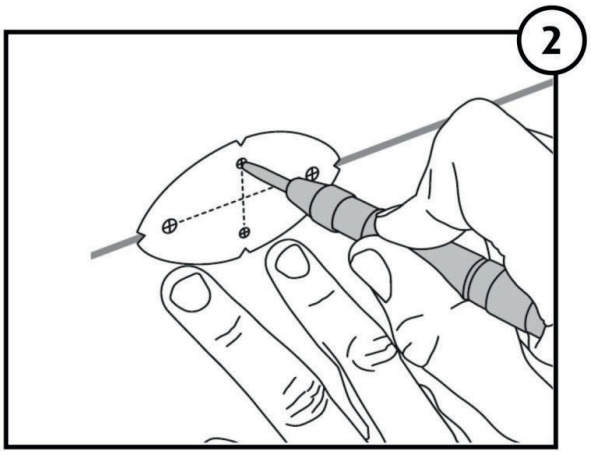
2

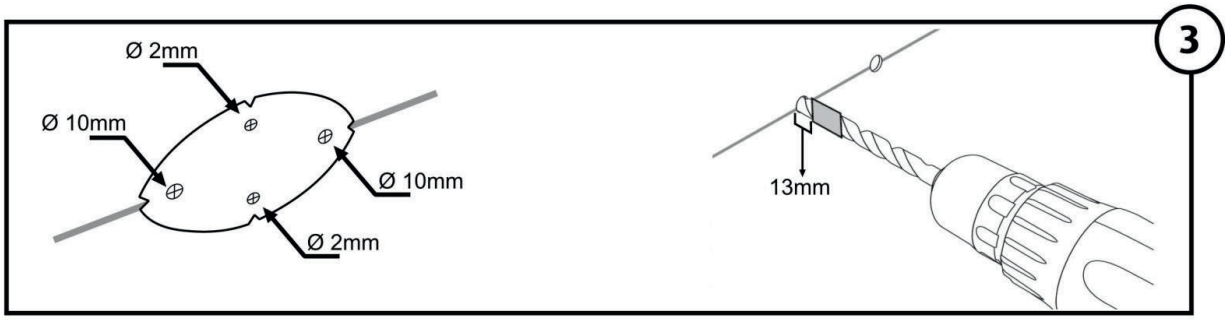
3
Ø 2mm
Ø 10mm
Ø 10mm
Ø 2mm
13mm

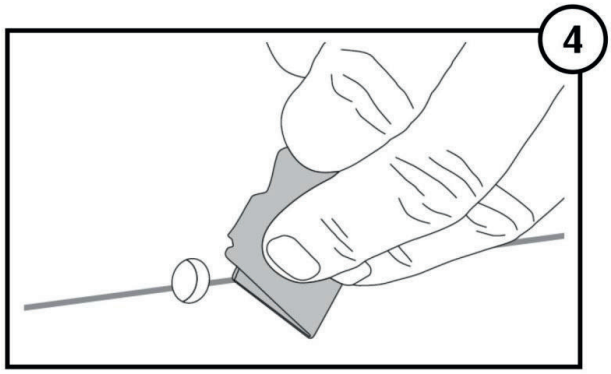
4

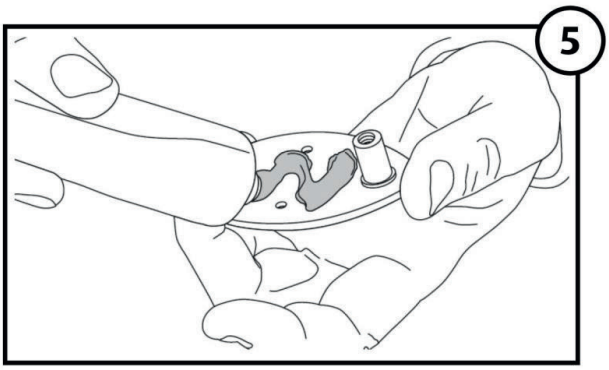
5

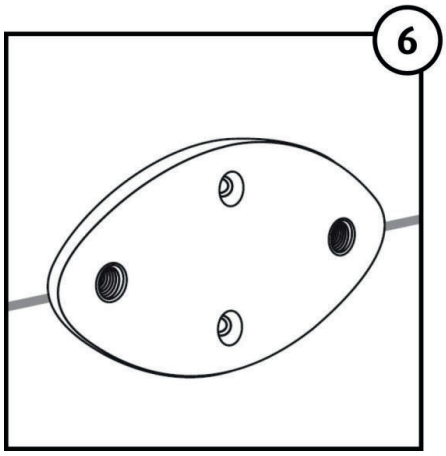
6

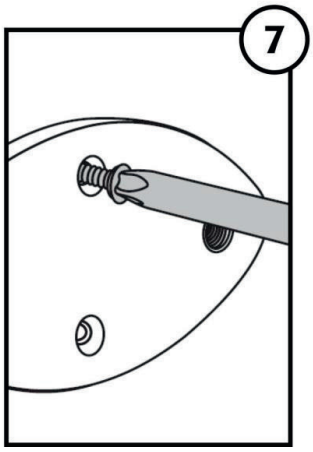
7

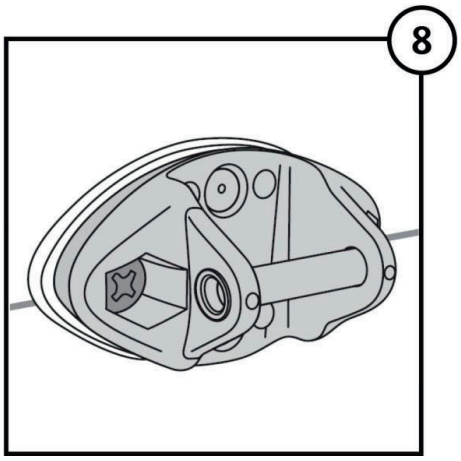
8

Thule Levelers

INFO

- Material: UV proof, HD PE material
- Colour: Black
- Net weight: 1.8 kg/leveler
- Dimensions: 560 mm L x 200 mm W x 150 mm H
- Max. load capacity: 5 ton/set

FEATURES

- Set of two levelers with a handy carry bag
- Three different heights make it easier to get the vehicle levelled:
  44 - 78 - 112 mm
- Large surface area for increased stability
- The striped area offers perfect grip between the tyre and the leveler
- Ideal for wider tyres
- Easy to store and to clean
- Content:
  - Set of two levelers
  - Carry bag

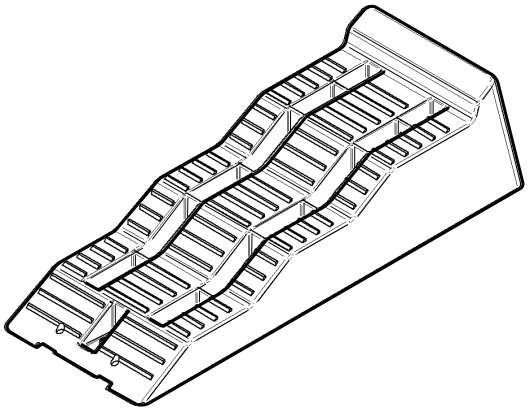

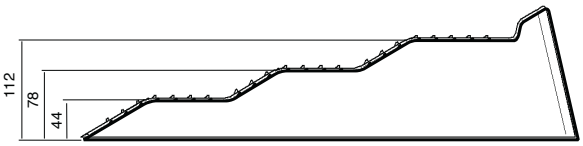

307617	Thule Levelers

Locks

Lost Key Service	272
Thule Cable Lock	273
Thule Strap Lock	273
Thule Door Lock	274
Thule Door Frame Lock	275
Thule Security Handrail	276
Thule Security Handrail Short Version	277
Thule Security Handrail Door Frame Kit	278
Thule Cab Lock	279
Thule Van Lock	281
Thule Inside-Out Lock G2	282
Thule Universal Lock	283

Lost Key Service

When buying a Thule Lock

To assure a very high safety level of our security products the key number is not shown on the door lock itself but only on the keys. This means it is important to write down the key number in order to order any spare keys in case of loss.

Therefore we have printed this card on the packaging of all Thule Door Locks:

THULE® SWEDEN

KEY NUMBER:

.....

EN **Write down your key number and keep this card in a safe place. In case of lost keys, you need this number to order a spare key.**

DE Notieren Sie hier Ihre Schlüssel-Nummer und bewahren Sie diese Karte an einem sicheren Ort auf. Im Falle eines Schlüsselverlustes können Sie mit dieser Nummer einen Ersatzschlüssel bestellen.

FR Notez votre numéro de clef sur cette carte et gardez-la précieusement. En cas de perte, ce numéro vous permettra de commander une nouvelle clef.

NL Noteer hier uw sleutelnummer en bewaar deze kaart op een veilige plaats. Bij verlies van sleutels heeft u dit nummer nodig om een reserve sleutel te bestellen.

In case you need to order new keys

I. When the key number is known

If the key number is known, a set of 2 spare keys can be ordered to match the existing lock.

1500602260	Key number known - spare keys for door locks (2 pcs)

II. When the key number is unknown

In case of lost keys and unknown key number, we offer the option to dismount the lock and change the lock cylinder by a new one (delivered with 2 new keys).

1500602681	Key number unknown - new lock cylinder + 2 keys

To take out the existing lock cylinder from the lock, the brass push-button needs to be pushed.

Push-button on new lock cylinder

Position of push-button on Thule Door Lock

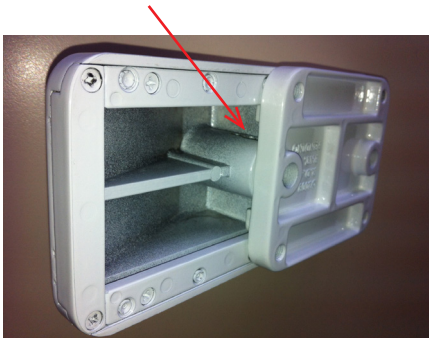

Thule Cable Lock

INFO

- Strong cable with secure lock
- Coated to avoid damage to your belongings
- Two keys
- Length: 180 cm

538000	Thule Cable Lock

Thule Strap Lock

INFO

- The lightweight aluminium strap buckle has a protective cover to avoid scratches and marks
- The strap contains a highly durable steel core wire which protects against cutting
- With the Thule Strap Lock the bikes are not only extra secured during transport but they are also protected against theft
- It's possible to tighten the strap both when open and locked
- Can also be used for any other purpose when you want to secure other valuable items
- Length: 3.00 m
- Net weight: 0.390 kg
- Gross weight: 0.450 kg (incl. packaging)

307389	Thule Strap Lock (per 20 pcs)

Thule Door Lock

INFO

- Material — Solid powder-coated aluminium
- Colour — White
- Net weight — 0.850 kg
- Gross weight — 0.915 kg (with packaging)

FEATURES

- High security lock for motorhomes and caravans
- Slide left or right to lock and secure the motorhome and caravan doors, hatches or garage
- Can be used for left or right opening doors
- Fast and simple to install
- Mounted through the wall of the vehicle with a mounting plate, a sealing cover and bolts

RELATED PRODUCT

- Thule Door Frame Lock

TECHNICAL DRAWING

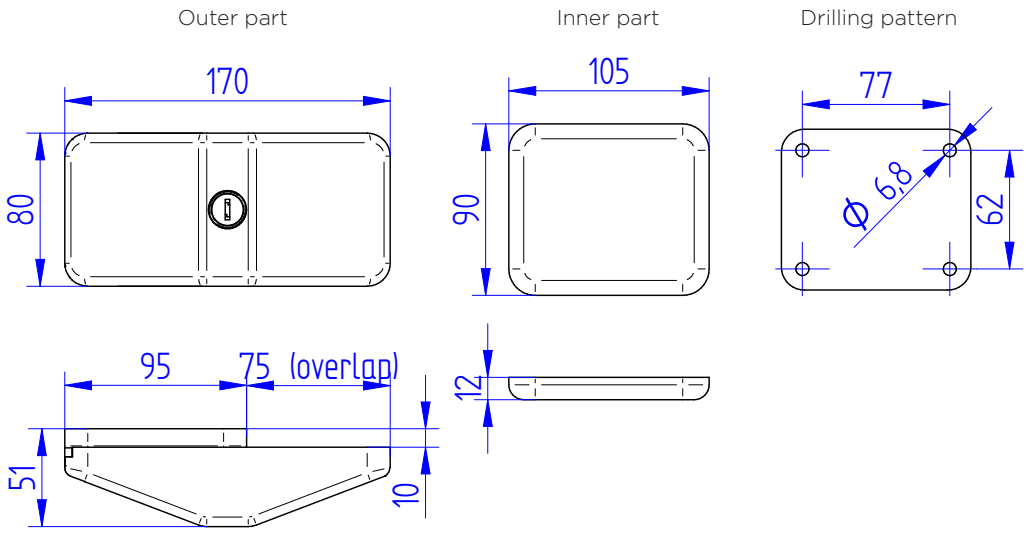

Bolt length	Wall thickness (mm)	
	min.	max.
35	25	30
40*	30	35
45	35	40
50	40	45

*Standard delivered bolts

308888	Thule Door Lock - Single pack
308890	Thule Door Lock - Triple pack

Thule Door Frame Lock

INFO

- Material: Solid powder-coated aluminium
- Colour: White
- Net weight: 0.840 kg
- Gross weight: 0.895 kg (packaging included)

FEATURES

- The Thule Door Frame Lock enables the installation of the Thule Door Lock when there is no space inside the vehicle to fit the mounting plate. This can happen due to wall furniture
- Slide left or right to lock and secure the motorhome and caravan doors, hatches or garage
- Can be used for left or right opening doors
- The frame is screwed into the side of the door frame
- Requires a 5 mm gap between door and frame

TECHNICAL DRAWING

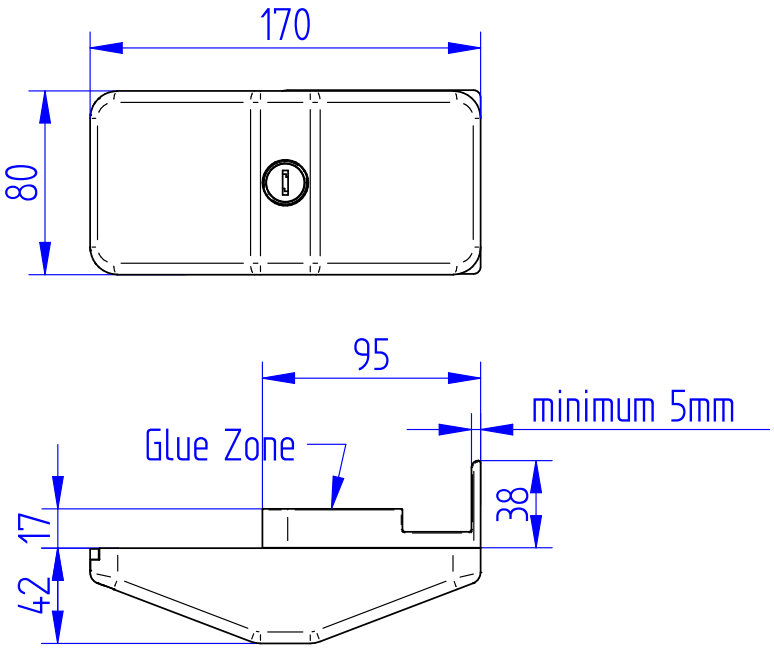

308889	Thule Door Frame Lock - Single pack
308891	Thule Door Frame Lock - Triple pack

Thule Security Handrail

INFO

- Material — Solid powder-coated aluminium with anti-slip grip
- Colour — White
- Net weight — 2.000 kg
- Gross weight — 2.270 kg (packaging included)

FEATURES

- A sturdy and easy-to-fit handrail, ideal for motorhomes and caravans
- Double-locking mechanism and large overlap with door for extra high stability
- In the open position, it offers a sturdy grab handle to help getting in and out the vehicle and when locked it folds across the door giving added visible security
- Can be used on both left or right opening doors
- Easy to mount through the vehicle wall with 2 mounting plates, covers and bolts or in the frame of the door with the optional Thule Security Handrail Frame Mounting Kit

RELATED PRODUCT

- Thule Security Handrail Frame Mounting Kit

TECHNICAL DRAWING

Outer part

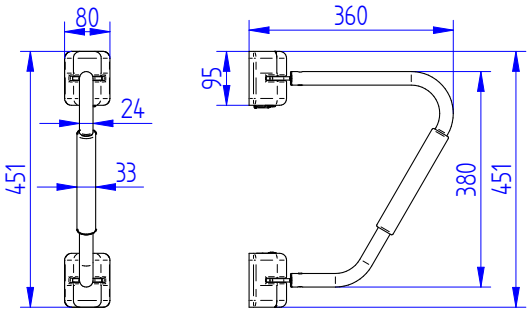

Inner part

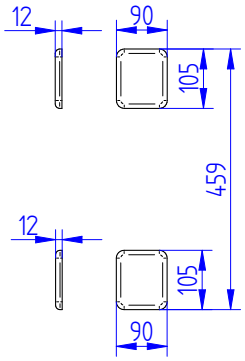

Drilling pattern

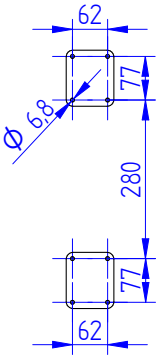

Bolt length	Wall thickness (mm)	
	min.	max.
35	25	30
40*	30	35
45	35	40
50	40	45

*Standard delivered bolts

308892	Thule Security Handrail

Thule Security Handrail Short Version

INFO

- Material: Solid powder-coated aluminium with anti-slip grip
- Colour: White
- Net weight: 1.850 kg
- Gross weight: 2.050 kg (packaging included)

FEATURES

- A sturdy and easy-to-fit handrail, ideal for motorhomes and caravans
- Double-locking mechanism and large overlap with door for extra high stability
- In the open position, it offers a sturdy grab handle to help getting in and out the vehicle and in its locked position it folds across the door giving added visible security
- Can be used on both left or right opening doors
- More compact, requires less space for installation
- Easy to mount through the vehicle wall with 2 mounting plates, covers and bolts or in the frame of the door with the optional Thule Security Handrail Frame Mounting Kit
- The short version is advised for vehicles with a lower entry door, for vehicles with a higher entry door, the standard Thule Security Handrail is advised

RELATED PRODUCT

- Thule Security Handrail Frame Mounting Kit

TECHNICAL DRAWING

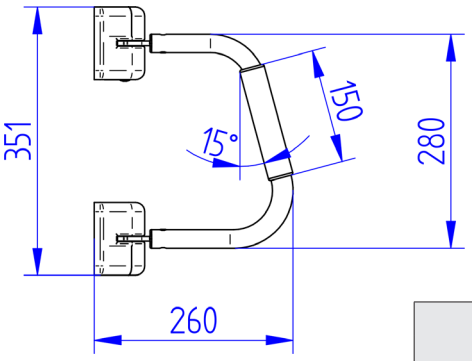

Bolt length	Wall thickness (mm)	
	min.	max.
35	25	30
40*	30	35
45	35	40
50	40	45

*Standard delivered bolts

307387	Thule Security Handrail Short Version

Thule Security Handrail Door Frame Kit

INFO

- Material — Solid powder-coated aluminium
- Colour — White
- Net weight — 0.350 kg
- Gross weight — 0.400 kg (packaging included)

FEATURES

- This kit enables the installation of the Thule Security Handrail when there is no space inside the vehicle to fit the mounting plates. This can happen for example due to wall furniture
- The kit is screwed into the side of the door frame
- Requires a 5 mm gap between door and frame

308893	Thule Security Handrail Door Frame Kit

Thule Cab Lock

INFO

Thule Cab Lock Ducato - Double Pack

- Material Solid lacquered aluminium
- Colour Grey
- Net weight 1.085 kg
- Gross weight 1.185 kg (packaging included)

Thule Cab Lock Sprinter - Double Pack

- Material Solid lacquered aluminium
- Colour Grey
- Net weight 1.355 kg
- Gross weight 1.455 kg (packaging included)

FEATURES

- High-security lock for motorhomes and vans
- To secure cabin doors from inside with a key
- Colour in harmony with van interior
- Easy installation thanks to drilling template and mounting instructions
- Special screws to mount directly on the cabin door
- Big coverage behind vertical post of cabin door

- Thule Cab Lock Ducato is suitable for:
  - Fiat Ducato (> 2007)
  - Citroën Jumper (> 2007)
  - Peugeot Boxer (> 2007)
  - Ford Transit (>2004)
- Thule Cab Lock Sprinter is suitable for:
  - Mercedes Sprinter (> 2006)
  - Volkswagen Crafter (> 2006)
  - Renault Master (> 2010)
  - Opel Movano (> 2010)

TECHNICAL DRAWING - Thule Cab Lock Ducato

Inner part

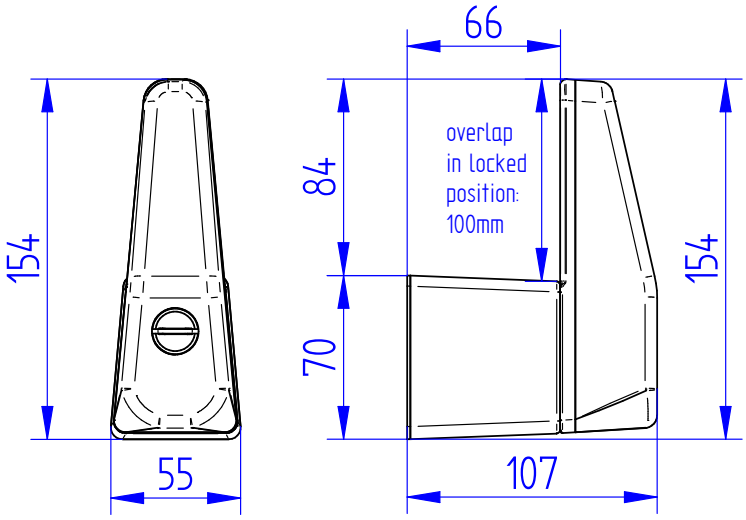

Drilling pattern

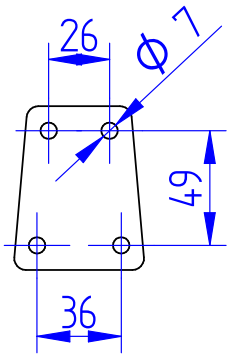

TECHNICAL DRAWING - Thule Cab Lock Sprinter

Inner part

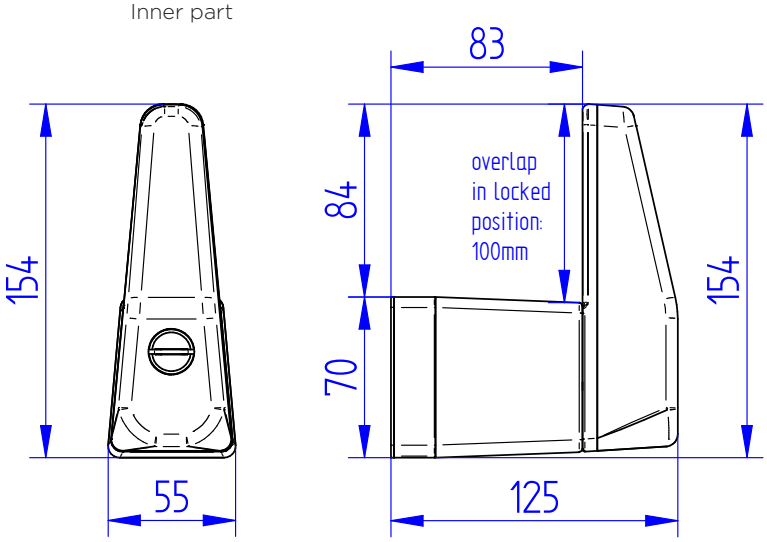

Drilling pattern

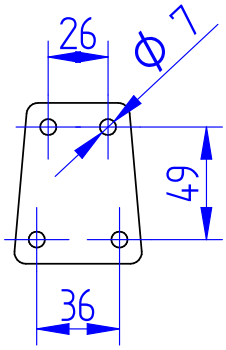

309830	Thule Cab Lock Ducato - Double pack
309831	Thule Cab Lock Sprinter - Double pack

Thule Van Lock

INFO

- Material — Solid powder-coated aluminium
- Colour — Black
- Net weight — 0.525 kg
- Gross weight — 0.580 kg (packaging included)

FEATURES

- High-security lock for vans
- Fits all van models
- To secure rear door and sliding side door
- Patented concept and design
- Lock slides in front of the door to prevent opening
- The lock fastens both parts of the door ensuring high security
- Colour in harmony with bumper and handles of van
- Anti-rattling system integrated
- Special screws to mount directly on doors
- Can be combined with the Thule Cab Lock to protect the entire vehicle

TECHNICAL DRAWING

Outer part

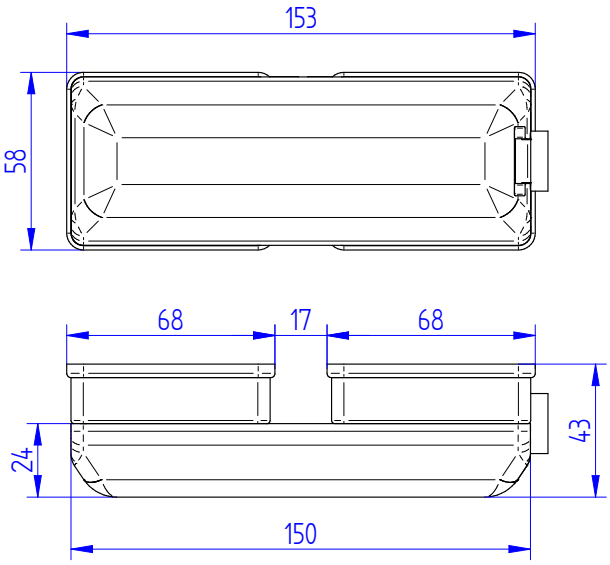

Drilling pattern

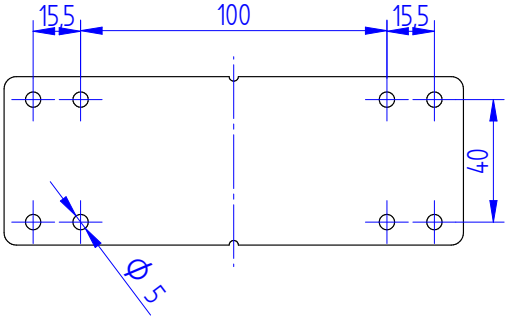

309832	Thule Van Lock - Single pack
309833	Thule Van Lock - Double pack

Thule Inside-Out Lock G2

INFO

- Material — Solid powder-coated aluminium
- Colour outer part — White
- Colour inner part — Silver grey
- Net weight — 0.940 kg
- Gross weight — 1.085 kg (packaging included)

FEATURES

- High-security lock for motorhomes and caravans
- To secure the entrance door from the in- and outside
- Large overlap with door for greater security
- Lockable from both sides but for your safety it can always be opened from the inside
- Lockable with a key from the outside
- Limited space required for installation
- To be mounted through the wall
- Can be installed horizontally or vertically for optimal orientation of inner part
- Maximum wall thickness: 45 mm

TECHNICAL DRAWING

Bolt length	Wall thickness (mm)	
	min.	max.
40 ; 50	25	30
45 ; 55*	30	35
50 ; 60	35	40
55 ; 65	40	45

*Standard delivered bolts

Outer part

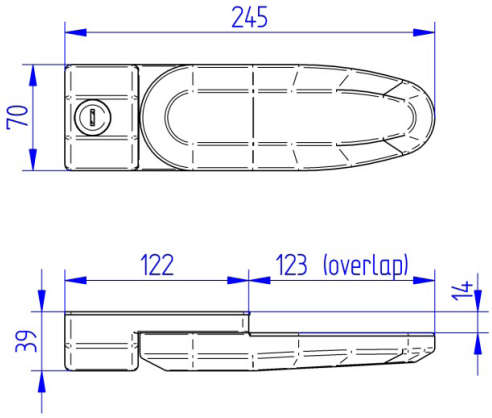

Inner part

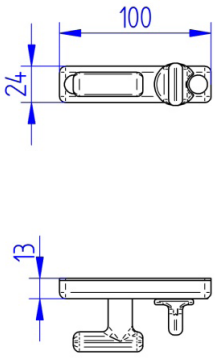

Drilling pattern

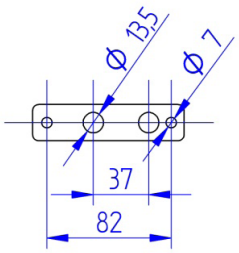

307339	Thule Inside-Out Lock G2

Thule Universal Lock

INFO

- Material: Solid powder-coated aluminium
- Colour: White - Black
- Net weight: 0.540 kg surface | 0.720 kg wall | 0.760 kg door
- Gross weight: 1.020 kg (with packaging)

FEATURES

- High-security lock for motorhomes, caravans and vans
- Available in single, double or triple packaging with identical keys
- Large overlap with door for great security
- Strong rotating lock system with a sturdy 8 mm axle
- Integrated anti-rattling system
- 3 different mounting options with the same lock

MOUNTING OPTIONS

1) Surface-mounted installation

- For sliding doors, cabin doors or double rear doors of a van
- Installed with 4 screws in the vehicle's body

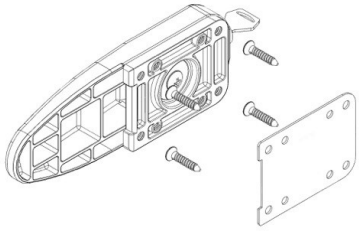

2) Wall-mounted installation

- For entrance door, garage door or hatches of a motorhome or caravan
- Installation through the wall with 4 bolts, mounting plate and cover
- Fits on both left or right opening doors

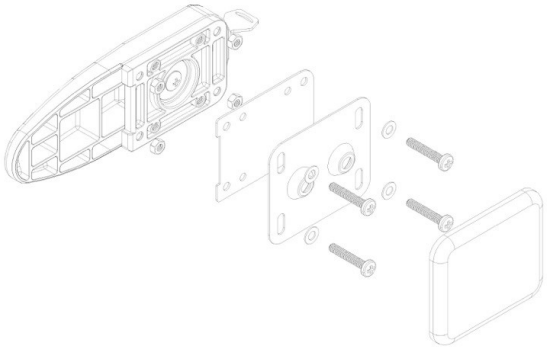

3) Door frame-mounted installation

- For entrance door, garage door or hatches of motorhomes or caravans
- When space inside the vehicle is too limited to fit the mounting plate
- Installation with 2 screws in the door frame
- The door frame bracket only requires a 3 mm gap between door and frame
- Fits left or right opening doors

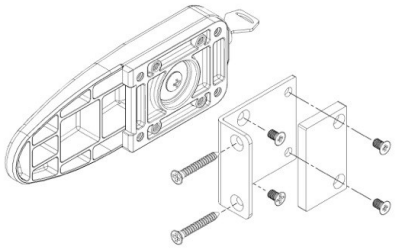

TECHNICAL DRAWING

1) Surface-mounted installation

Outer part

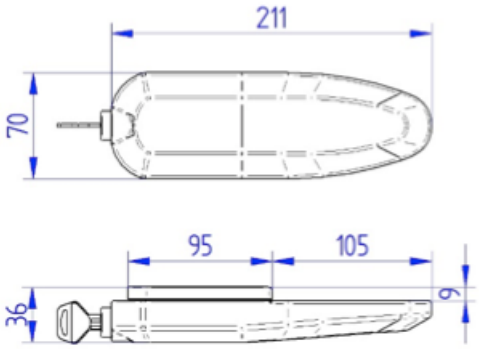

Drilling pattern

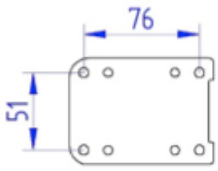

2) Wall-mounted installation

Outer part

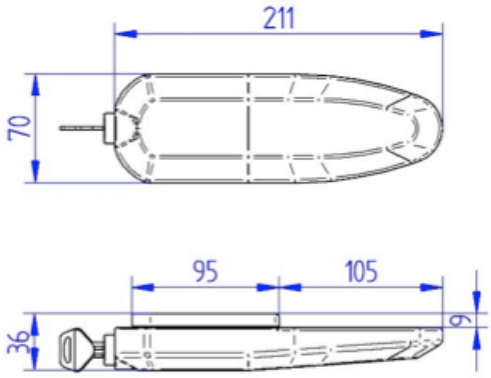

Inner part

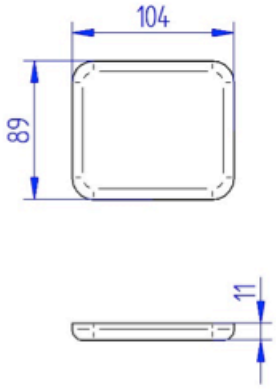

Drilling pattern

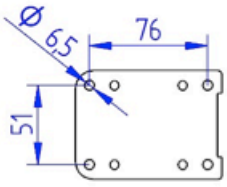

Bolt length	Wall thickness (mm)	
	min.	max.
35	25	30
40*	30	35
45	35	40
50	40	45

*Standard delivered bolts

3) Door frame-mounted installation

Outer part

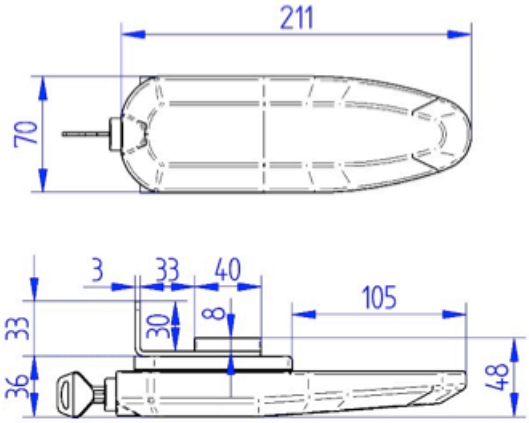

Drilling pattern

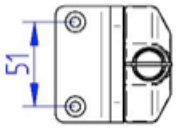

301406	Thule Universal Lock White - Single pack
301419	Thule Universal Lock White - Double pack
301407	Thule Universal Lock White - Triple pack
301408	Thule Universal Lock Black - Single pack
301409	Thule Universal Lock Black - Double pack

RV ACCESSORIES - SPARE PARTS

2024 PRICE LIST	Valid from 01-01-2024
2024 LISTE DE PRIX	Valable à partir du 01-01-2024
2024 PRIJSLIJST	Geldig vanaf 01-01-2024
2024 PREISLISTE	Gültig ab 01-01-2024

Price List 2024

(EN) SALES CONDITIONS

- Consumer Prices exclude tax.
- All prices can be modified without previous notice.
- This price list cancels all previous price lists.

(FR) CONDITIONS DE VENTE

- Prix public conseillés hors taxes.
- Ces prix peuvent être sujet à modification sans notification préalable.
- Cette liste de prix annule et remplace toute autre liste publiée antérieurement.

(NL) VERKOOPSVOORWAARDEN

- Consumentenprijzen excl. BTW.
- De prijzen kunnen op elk moment gewijzigd worden zonder voorafgaande melding.
- Deze prijslijst vernietigt alle voorafgaande prijslijsten.

(DE) VERKAUFSBEDINGUNGEN

- Endverbraucherpreise excl. MwSt.
- Preiseänderungen behalten wir uns vor, ohne vorherige Bekanntmachung.
- Mit dieser Preisliste verlieren alle vorher veröffentlichten Preislisten Ihre Gültigkeit.

Thule NV
Kortrijkstraat 343
BE-8930 Menen
Belgium

Phone +32 56 52 88 99
Fax +32 56 51 02 05
www.thule.com
infoRV@thule.com

V.01
1/01/2024

2024 SPARE PARTS LIST
Index

AWNINGS	Type	Model	Page
Current	All	Awning Common Parts	6
	Wall awnings	Thule Omnistor 1200	8
		Thule 3200	10
		Thule 4200	12
		Thule Omnistor VW California	14
		Thule Omnistor 5102	15
		Thule Omnistor 5200	16
		Thule Omnistor 8000	19
	Roof awnings	Thule Omnistor 6300	23
		Thule Omnistor 9200	26
	Accessories	LED Rails	29
Phased-out	Wall awnings	Thule Omnistor 2000	30
		Thule Omnistor W150	32
		Thule Omnistor 5003	33
		Thule Omnistor 4900	36
		Tristor²	38
	Roof awnings	Thule Omnistor 6200 Eriba Touring	40
		Thule Omnistor 6200	42

TENTS	Type	Model	Page
Current	Residence	All models	45
	Panorama	All models	45
	Veduta	All models	45
	QuickFit	All models	48
	EasyLink	All models	48
	Blocker G2	All models	49
	Windscreen		51
	Tension Rafter G2	All models	52
Phased-out	Room & RBS	All models	53

BIKE CARRIERS	Type	Model	Page
Current	All	Bike Carrier Arms, Knobs and Keys	55
		Fatbike Rails	56
	Rear mounted	Thule Excellent - Common Parts	57
		Thule Excellent (Black) Long Version	57
		Thule Excellent Short Version	57
		Thule Elite G2 - Common Parts	58
		Thule Elite G2 Long Version	60
		Thule Elite G2 Short Version	60
		Thule Elite G2 HH	60
		Thule Elite G2 One Bike	60
		Thule Sport G2 - Common Parts	58
		Thule Sport G2 Long Version	61
		Thule Sport G2 Short Version	61
		Thule Sport G2 W150 / Hobby	61
		Thule Sport G2 Tour	62
		Thule Sport G2 Universal	62
		Thule Essential - Common Parts	63
		Thule Essential Long Version	63
		Thule Essential Short Version	63
		Thule Esse4 Long Version	64
		Thule Esse4 Short Version	64
		Thule Esse4 Tripel (Black)	64
	Lift	Thule Lift V16 Manual	65
		Thule Lift V16 12V	65
	Garage	Thule VeloSlide	66
		Thule VeloSlide Short	66
		Thule Sport G2 Garage	67
		Thule Sport G2 2-doors	67
	Van	Thule Elite Van XT - Common Parts	58
		Thule Elite Van XT (Black)	68
		Thule Sport G2 Compact	69
		Thule Wanderway 2	70
	A-frame	Thule Caravan Superb XT Black	71
		Thule Caravan Superb XT Black SV	71
		Thule Caravan Superb	72
		Thule Caravan Superb SV	72
		Thule Caravan Light	73
		Thule Caravan Smart	73
		Thule Caravan Smart Eriba Touring	73
Phased-out	Rear mounted	Thule Elite Eura Cargo 3 bikes	74
	Van	Thule Elite G2 Van (Ducato - Jumper - Boxer >2007)	75
		Thule Sport G2 Van (Ducato - Jumper - Boxer <2007)	75
	Lift	Thule Lift Manual	76
		Thule Lift 12V	76

STEPS	Type	Model	Page
Current	All	Step Common Parts	77
	Motorised	Thule Slide-Out Step G2 Standard	78
		Thule Slide-Out Step G2 Ducato/Jumper/Boxer Euro 6d-Final	80
		Thule Slide-Out Step G2 Crafter	82
		Thule Slide-Out Step G2 Crafter 4WD 550	84
		Thule Single Step V15	85
		Thule Single Step Compact	85
		Thule Single Step V15 12V Hymer	87
		Thule Double Step	88
		Thule Double Step with Skirt	90
		Thule Double Step V15 12V with Skirt	91
	Manual	Thule Slide-Out Step Manual	92
Phased-out	Motorised	Thule Slide-Out Step V19 12V Ducato/Jumper/Boxer Euro6 d-Temp	93
		Thule Slide-Out Step V19 12V Crafter	94
		Thule Slide-Out Step V19 12V Crafter 4WD 550	95
		Thule Slide-Out Step V18 12V	96
		Thule Slide-Out Step V16 12V Ducato	98
		Thule Slide-Out Step V12 12V	99
		Thule Single Step V10	85
	Manual	Thule Single Step Manual V10	85

OTHER			Page
Current		Rooflights - Thule Vent	100
		Thule Ladders	101
		Thule Ladder Deluxe	102
		Thule Roof Racks	103
		Thule Telescopic Ladder	104
		Thule Fixpoint Evo	105
		Thule ProBar Flex	106
		Thule SmartClamp System	107
		Thule Locks	108
		Thule Levelers	109
Phased-out		Thule Boxes	110

Notes

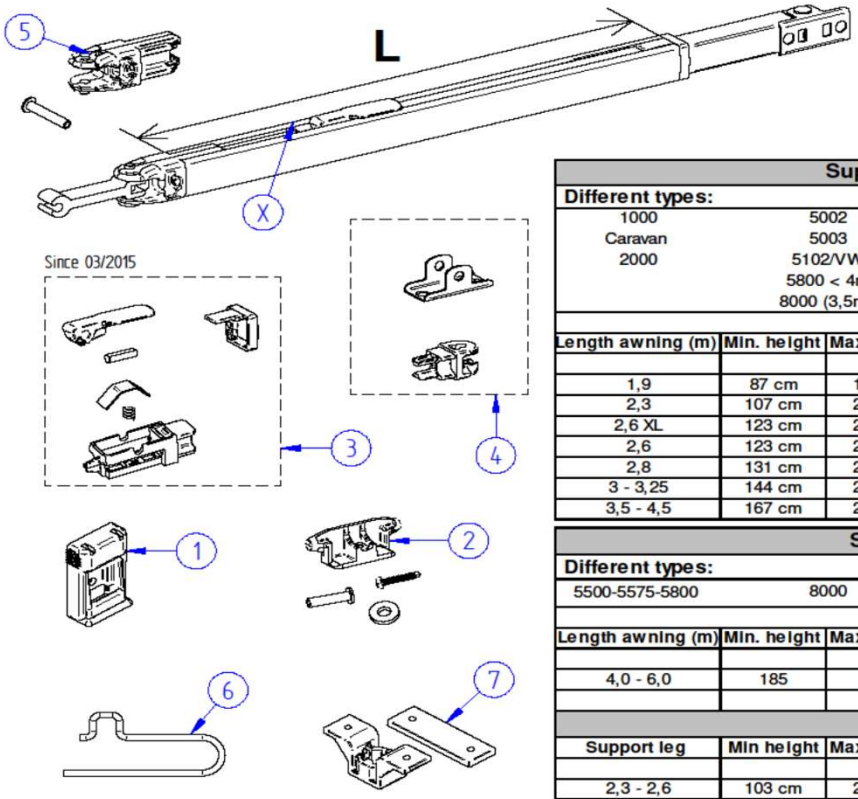

Support arm light >2009						
Different types:						
1000	5002	6002	OmniV10			
Caravan	5003	6002 Car & style	OmniV10 XL			
2000	5102/VW	6802 < 4m	Omnisol			
	5800 < 4m	6002 Hobby	600K			
	8000 (3,5m)	6200	600K-TL			
General rule						
Length awning (m)	**Min. height**	**Max. height**	**L = outer profile**	**3 parts**	**2 parts**	**Movex**
1,9	87 cm	177 cm	68 cm	X		1500601588
2,3	107 cm	217 cm	88 cm	X		1500601609
2,6 XL	123 cm	276 cm	103 cm	X		1500601960
2,6	123 cm	208 cm	103 cm		X	1500601610
2,8	131 cm	225 cm	111 cm		X	1500601961
3 - 3,25	144 cm	248 cm	123 cm		X	1500601611
3,5 - 4,5	167 cm	296 cm	147 cm		X	1500601612

Support arm heavy						
Different types:						
5500-5575-5800	8000	6502-6802-6900	6002 Jet	9200		
General rule						
Length awning (m)	**Min. height**	**Max. height**	**L = outer profile**	**2 parts**	**Movex**	
4,0 - 6,0	185	332	165 cm	X	1500601312	
Caravan Style						
Support leg	**Min height**	**Max. height**	**L = outer profile**	**3 parts**	**2 parts**	**Movex**
2,3 - 2,6	103 cm	228 cm	84 cm	X		1500602182
3,0 - 4,5	140 cm	241 cm	119 cm		X	1500602183

THULE Omnistor General pieces 1 STA 600-03

Support legs of the TO 1200, T 3200, T 4200, TO 5200 and TO 6300 awnings are special executions and specified on the individual awning page

	ART.NR.	DESCRIPTION	RETAIL € (ex.VAT)
1	1500601212	PLASTIC BOTT.MOUNT.BRACKET 2PCS	18,90
	1500602390	BOTTOM MOUNTING BRACKET BLACK 2PC	18,90
2	1500601789	CENTRAL CLAMP SUPPORT LEG V2	4,40
3	1500601605	ADJ.BALANCER ASSY SUPPORT LEG V2 (2 PCS)	11,70
4	1500601604	FOOT + RIVET SUPPORT LEG V2 (2PCS)	16,70
5	1500601603	FEMALE HINGE SUPPORT LEG V2	13,90
6	1500602670	WIRE SPRING SUPPORT LEG V2 - 2PC	Not available
7	1500603485	CONNECTOR LEAD RAIL THIRD SUPPORT LEG	11,70
	1500601588	SUPPORT ARM V2 1.90M	88,50
	1500601609	SUPPORT ARM V2 2.30M	88,50
	1500601960	SUPPORT ARM V2 2.60M XL	88,50
	1500601611	SUPPORT ARM V2 3.00M	80,30
	1500601612	SUPPORT ARM V2 3.50-4.50M	80,30
	1500601312	SUPPORT ARM V2 LARGE	88,50

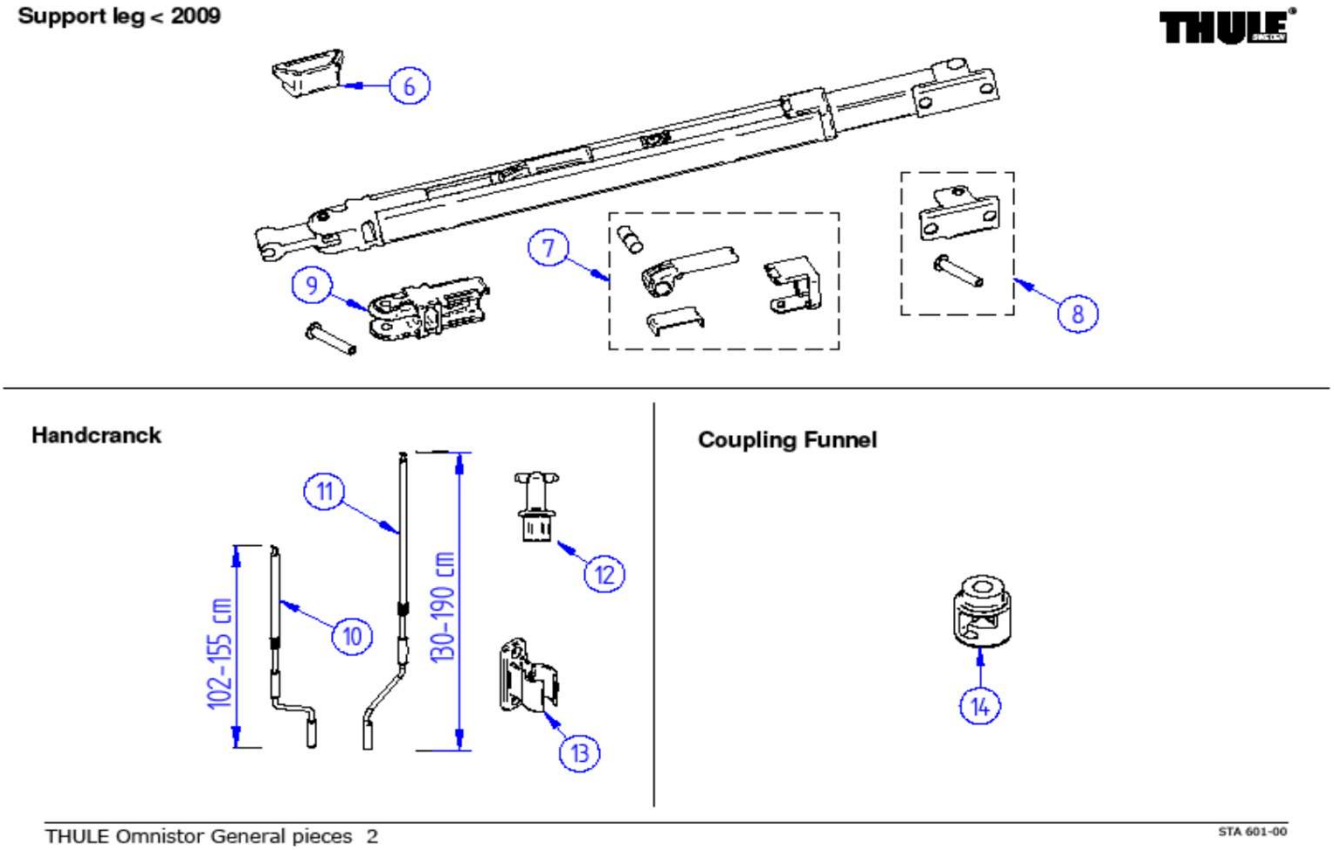

	ART.NR.	DESCRIPTION	RETAIL € (ex.VAT)
6	1500601789	CENTRAL CLAMP SUPPORT LEG	4,40
7	1500601150	ADJ.BALANCER ASSY SUPPORT LEG (2 PCS)	9,70
9	1500601278	FEMALE HINGE SUPPORT LEG ASSY	Not available
10	1500602210	HAND CRANK ASSY SHORT	50,90
11	1500600115	HAND CRANK ASSY LONG	56,40
12	1500601279	UPPER CRANK PIN	10,60
13	1500601222	HAND CRANK CLIPS (2PCS)	8,60
14	1500601211	COUPLING FUNNEL	20,90
15	1500602406	THULE AWNING LOGO STICKER	4,10

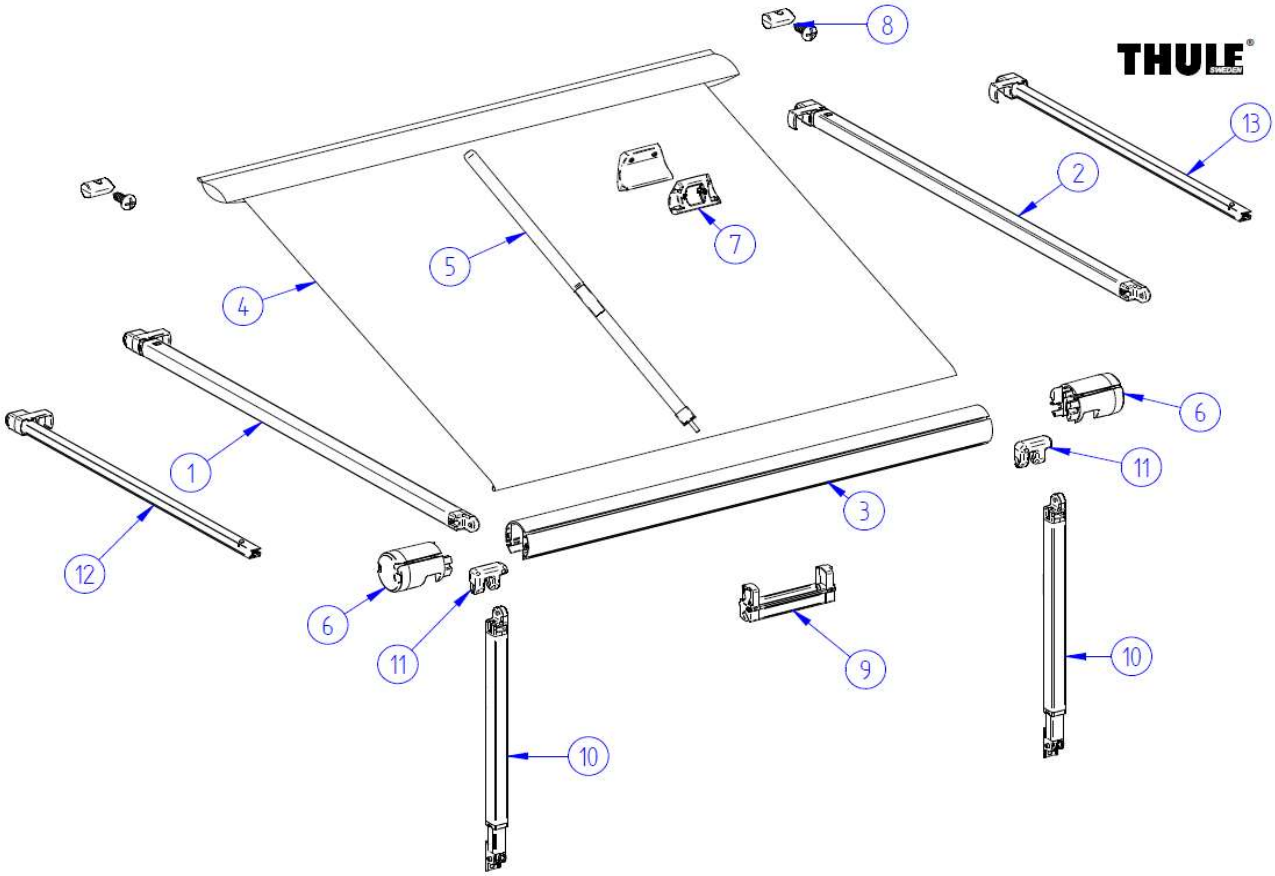

THULE Omnistor 1200 1BA 601-01

	ART.NR.	DESCRIPTION	RETAIL € (ex.VAT)
1	1500602900	LH RAFTER ARM ASSY TO1200 - 2.30 M	85,40
	1500602901	LH RAFTER ARM ASSY TO1200 - 2.60 M	85,40
	1500602902	LH RAFTER ARM ASSY TO1200 - 3.00/3,25 M	85,40
	1500602903	LH RAFTER ARM ASSY TO1200 - 3.50/5,50 M	85,40
2	1500602904	RH RAFTER ARM ASSY TO1200 - 2.30 M	85,40
	1500602905	RH RAFTER ARM ASSY TO1200 - 2.60 M	85,40
	1500602906	RH RAFTER ARM ASSY TO1200 - 3.00/3,25 M	85,40
	1500602907	RH RAFTER ARM ASSY TO1200 - 3.50/5,50 M	85,40
3	1500602908	ROLLER TUBE TO 1200 - 2,30M	87,80
	1500602909	ROLLER TUBE TO 1200 - 2.60M	101,50
	1500602910	ROLLER TUBE TO 1200 - 3.00M	108,40
	1500602911	ROLLER TUBE TO 1200 - 3.25M	122,00
	1500602912	ROLLER TUBE TO 1200 - 3.50M	122,00
	1500602913	ROLLER TUBE TO 1200 - 3.75M	135,30
	1500602914	ROLLER TUBE TO 1200 - 4,00M	135,30
	1500602915	ROLLER TUBE TO 1200 - 4.25M	148,80
	1500602916	ROLLER TUBE TO 1200 - 4.50M	148,80
	1500602979	ROLLER TUBE TO 1200 - 5,00M	202,80
	1500602980	ROLLER TUBE TO 1200 - 5.50M	202,80
4	1500602917	FABRIC 2.30M TO 1200 - 31	287,90
	1500602918	FABRIC 2.30M TO 1200 - 32	287,90
	1500602919	FABRIC 2.60M TO 1200 - 31	305,20
	1500602920	FABRIC 2.60M TO 1200 - 32	305,20
	1500602921	FABRIC 3,00M TO 1200 - 31	339,20
	1500602922	FABRIC 3,00M TO 1200 - 32	339,20
	1500602923	FABRIC 3,25M TO 1200 - 31	350,70
	1500602924	FABRIC 3,25M TO 1200 - 32	350,70
	1500602925	FABRIC 3,50M TO 1200 - 31	373,80
	1500602926	FABRIC 3,50M TO 1200 - 32	373,80

	1500602927	FABRIC 3,75M TO 1200 - 31	386,20
	1500602928	FABRIC 3,75M TO 1200 - 32	386,20
	1500602929	FABRIC 4,00M TO 1200 - 31	411,00
	1500602930	FABRIC 4,00M TO 1200 - 32	411,00
	1500602931	FABRIC 4,25M TO 1200 - 31	424,00
	1500602932	FABRIC 4,25M TO 1200 - 32	424,00
	1500602933	FABRIC 4,50M TO 1200 - 31	450,20
	1500602934	FABRIC 4,50M TO 1200 - 32	450,20
	1500602981	FABRIC 5,00M TO 1200 - 31	489,00
	1500602982	FABRIC 5,00M TO 1200 - 32	489,00
	1500602983	FABRIC 5,50M TO 1200 - 31	533,20
	1500602984	FABRIC 5,50M TO 1200 - 32	533,20
5	307311	TENSION RAFTER 2.50M TO1200	See price list
6	1500602935	LH&RH ENDCAP ROLL.TUBE TO1200	35,30
7	1500602936	TENSION ARM GUARD TO1200 - 2PCS	17,40
8	1500601177	CARAVAN RAIL BLOCKER SET	5,80
9	1500602937	COUNT.PCE R.TUBE TO1200 - 2,30M/2,60M	10,40
	1500602938	COUNT.PCE R.TUBE TO1200 - 3,00M	10,40
	1500602939	COUNT.PCE R.TUBE TO1200 - 3,25M	11,60
	1500602940	COUNT.PCE R.TUBE TO1200 - 3,50M	13,40
	1500602941	COUNT.PCE R.TUBE TO1200 - 3,75M	15,50
	1500602942	COUNT.PCE R.TUBE TO1200 - 4,00M	17,40
	1500602943	COUNT.PCE R.TUBE TO1200 - 4,25M	19,50
	1500602944	COUNT.PCE R.TUBE TO1200 - 4,50M	21,20
	1500602985	COUNT.PCE R.TUBE TO1200 - 5,00M	42,40
	1500602986	COUNT.PCE R.TUBE TO1200 - 5,50M	55,90
10	1500602945	SUPPORT ARM TO1200 - 2,30M	88,50
	1500602946	SUPPORT ARM TO1200 - 2,60M	88,50
	1500602958	SUPPORT ARM TO1200 - 3,00/3,25 M	80,30
	1500602959	SUPPORT ARM TO1200 - 3,50/5,50 M	80,30
11	1500602947	LH&RH HINGE TO1200	18,60
12	1500602977	LH EXTENDER RAFTER ARM TO1200 - 2,30M-3,25M	23,20
13	1500602978	RH EXTENDER RAFTER ARM TO1200 - 2,30M-3,25M	23,20

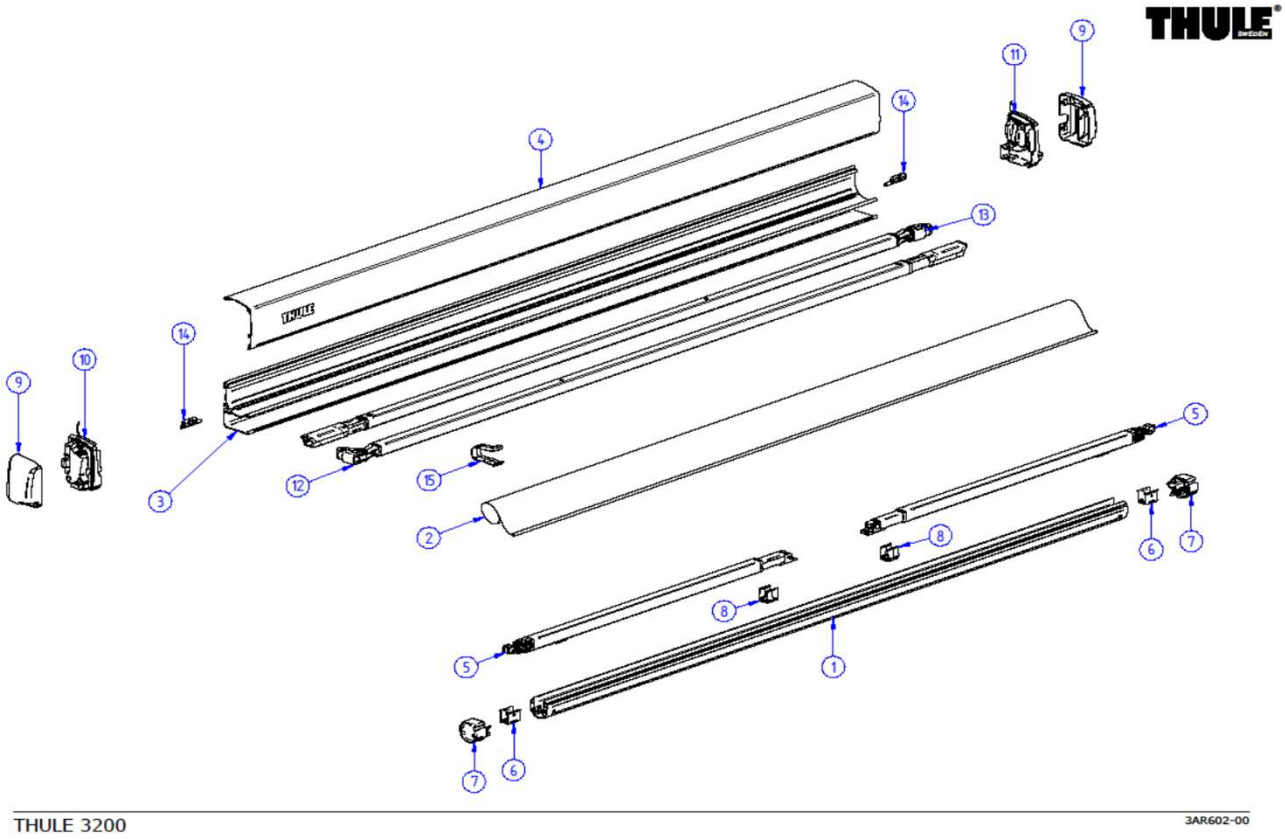

	ART.NR.	DESCRIPTION	RETAIL € (ex.VAT)
1	1500603489	ROLLER TUBE 3200 - 1.90M	93,00
	1500603490	ROLLER TUBE 3200 - 2.30M	93,90
	1500603491	ROLLER TUBE 3200 - 2.50M	94,40
	1500603492	ROLLER TUBE 3200 - 2.70M	100,40
	1500603493	ROLLER TUBE 3200 - 3.00M	107,00
2	1500603678	FABRIC 3200 1.90M 07	195,30
	1500603679	FABRIC 3200 2.30M 07	210,10
	1500603680	FABRIC 3200 2.50M 07	228,60
	1500603681	FABRIC 3200 2.70M 07	239,60
	1500603682	FABRIC 3200 3.00M 07	255,10
3	1500603499	MAIN HOUSING BOTTOM 3200 ANTHR 1.90M	141,70
	1500603500	MAIN HOUSING BOTTOM 3200 ANTHR 2.30M	142,70
	1500603501	MAIN HOUSING BOTTOM 3200 ANTHR 2.50M	143,00
	1500603502	MAIN HOUSING BOTTOM 3200 ANTHR 2.70M	156,90
	1500603503	MAIN HOUSING BOTTOM 3200 ANTHR 3.00M	165,50
4	1500603504	MAIN HOUSING TOP 3200 ANO 2.50M	100,30
	1500603505	MAIN HOUSING TOP 3200 ANO 2.70M	108,80
	1500603506	MAIN HOUSING TOP 3200 ANO 3.00M	114,00
	1500603507	MAIN HOUSING TOP 3200 ANTHR 1.90M	105,60
	1500603508	MAIN HOUSING TOP 3200 ANTHR 2.30M	106,50
	1500603509	MAIN HOUSING TOP 3200 ANTHR 2.50M	106,80
	1500603510	MAIN HOUSING TOP 3200 ANTHR 2.70M	116,20
	1500603511	MAIN HOUSING TOP 3200 ANTHR 3.00M	122,10
5	1500603512	SUPPORT ARM 3200 1.90M	88,10
	1500603513	SUPPORT ARM 3200 2.30M-2.50M	92,00
	1500603514	SUPPORT ARM 3200 2.70M-3.00M	92,20
6	1500603515	CONNECTOR SUPPORT ARM 3200 - 2PC	8,80
7	1500603516	LH+RH ENDCAP ROLLER TUBE 3200	12,70
8	1500603517	ANTI RATTLING SUPPORT ARM 3200 - 2PC	9,10

9	1500603518	LH+RH ENDCAP HOUSING	17,10
10	1500603519	LH ENDPLATE 3200 ASSY	45,30
11	1500603520	RH ENDPLATE 3200 ASSY	45,30
12	1500603521	LH TENSION ARM 3200 1.90M-2.30M	82,30
	1500603522	LH TENSION ARM 3200 2.50M-2.70M-3.00M	87,40
13	1500603523	RH TENSION ARM 3200 1.90M-2.30M	82,30
	1500603524	RH TENSION ARM 3200 2.50M-2.70M-3.00M	87,40
14	1500603525	LH+RH CENTER PIECE FABRIC 3200	9,80
15	1500603526	ANTI RATTLING TENSION ARM 3200 - 3PC	8,00

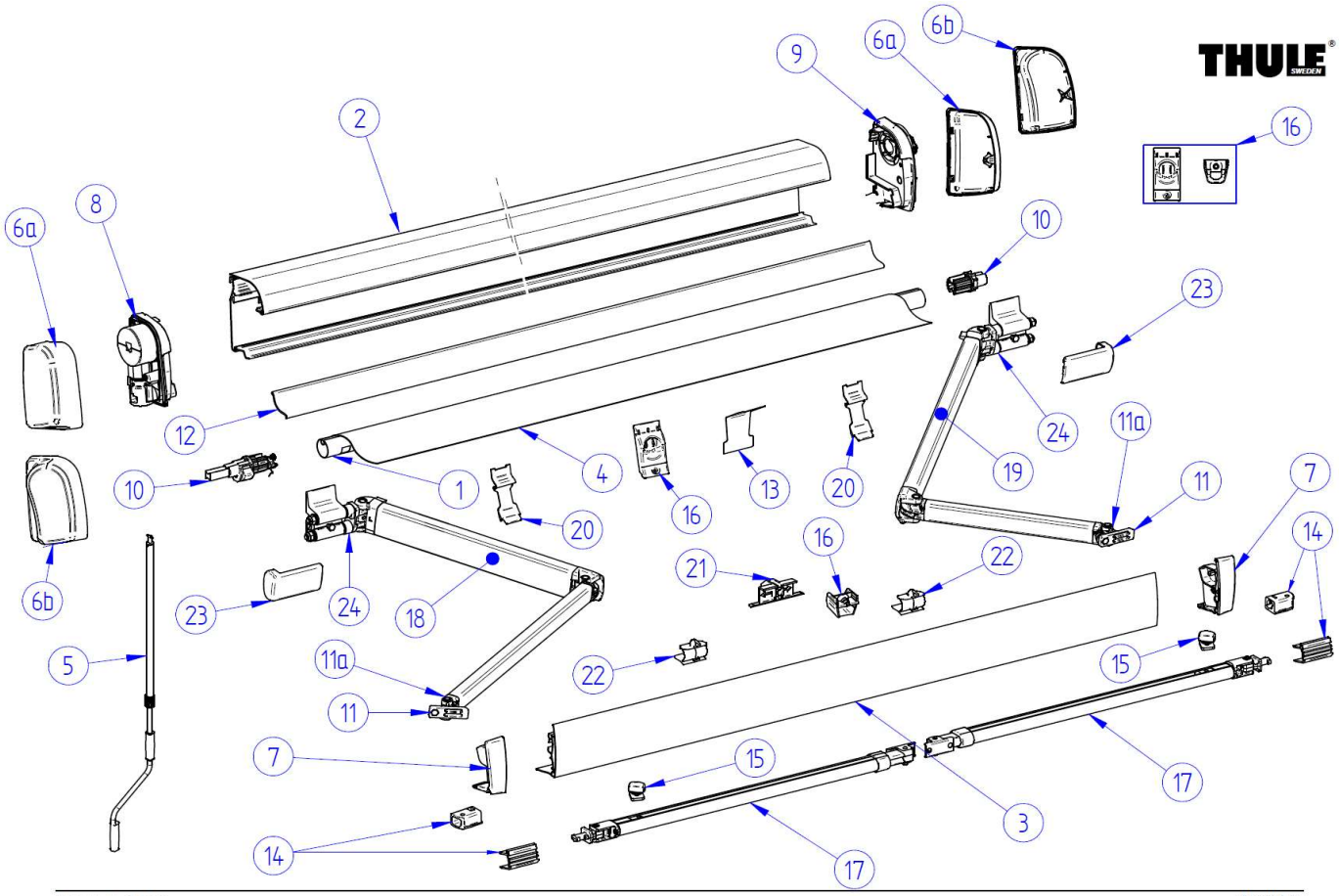

	ART.NR.	DESCRIPTION	RETAIL € (ex.VAT)
1	1500602658	ROLLER TUBE D=30X0.8MM / 4200-2,60M	60,00
	1500602186	ROLLER TUBE D=30X0.8MM / 4200-3.00M	66,60
	1500602187	ROLLER TUBE D=30X0.8MM / 4200-3.50M	75,50
	1500602188	ROLLER TUBE D=30X0.8MM / 4200-4.00M	84,70
	1500602189	ROLLER TUBE D=30X0.8MM / 4200-4.50M	93,90
2	1500603580	MAINHOUSING 4200 2M60 WHI	166,70
	1500603581	MAINHOUSING 4200 3M00 WHI	182,60
	1500603582	MAINHOUSING 4200 3M50 WHI	203,50
	1500603583	MAINHOUSING 4200 4M00 WHI	242,50
	1500603584	MAINHOUSING 4200 4M50 WHI	263,70
	1500603585	MAINHOUSING 4200 2M60 ANO	166,70
	1500603586	MAINHOUSING 4200 3M00 ANO	182,60
	1500603587	MAINHOUSING 4200 3M50 ANO	203,50
	1500603588	MAINHOUSING 4200 4M00 ANO	242,50
	1500603589	MAINHOUSING 4200 4M50 ANO	263,70
	1500603590	MAINHOUSING 4200 2M60 ANT	166,70
	1500603591	MAINHOUSING 4200 3M00 ANT	182,60
	1500603592	MAINHOUSING 4200 3M50 ANT	203,50
	1500603593	MAINHOUSING 4200 4M00 ANT	242,50
	1500603594	MAINHOUSING 4200 4M50 ANT	263,70
3	1500602661	LEADRAIL 4200/4900 2M60 WHI	119,30
	1500602194	LEADRAIL 4200/4900 3M00 WHI	131,90
	1500602195	LEADRAIL 4200/4900 3M50 WHI	151,70
	1500602196	LEADRAIL 4200/4900 4M00 WHI	172,80
	1500602197	LEADRAIL 4200/4900 4M50 WHI	175,20
	1500602662	LEADRAIL 4200/4900 2M60 ANO	119,30
	1500602248	LEADRAIL 4200/4900 3M00 ANO	131,90
	1500602249	LEADRAIL 4200/4900 3M50 ANO	151,70
	1500602250	LEADRAIL 4200/4900 4M00 ANO	172,80

	1500602251	LEADRAIL 4200/4900 4M50 ANO	175,20
	1500602950	LEADRAIL 4200/4900 2M60 ANT	119,30
	1500602951	LEADRAIL 4200/4900 3M00 ANT	131,90
	1500603607	LEADRAIL 4200 3M50 ANT	151,70
	1500603608	LEADRAIL 4200 4M00 ANT	172,80
	1500603609	LEADRAIL 4200 4M50 ANT	175,20
4	1500602663	FABRIC 2M60 4200 31	254,30
	1500602202	FABRIC 3M00 4200 31	283,00
	1500602204	FABRIC 3M50 4200 31	314,50
	1500602206	FABRIC 4M00 4200 31	346,20
	1500602208	FABRIC 4M50 4200 31	373,80
5	1500602210	HAND CRANK SMALL G2	50,90
6A	1500603610	LH+RH ENDCAP MAINH 4200 WHI STANDARD	17,40
	1500603611	LH+RH ENDCAP MAINH 4200 ANO STANDARD	17,40
	1500603612	LH+RH ENDCAP MAINH 4200 ANT STANDARD	17,40
6B	1500603613	LH+RH ENDCAP MAINH 4200 WHI AUTOMOTIVE	17,40
	1500603614	LH+RH ENDCAP MAINH 4200 ANO AUTOMOTIVE	17,40
	1500603615	LH+RH ENDCAP MAINH 4200 ANT AUTOMOTIVE	17,40
7	1500603616	LH+RH ENDCAP LEADRAIL 4200 WHI	14,40
	1500603617	LH+RH ENDCAP LEADRAIL 4200 ANO	14,40
	1500603618	LH+RH ENDCAP LEADRAIL 4200 ANT	14,40
8	1500603619	LH ENDPLATE ASSY 4200 WHI	69,80
	1500603620	LH ENDPLATE ASSY 4200 ANO	69,80
	1500603621	LH ENDPLATE ASSY 4200 ANT	69,80
9	1500603622	RH ENDPLATE ASSY 4200 WHI	17,40
	1500603623	RH ENDPLATE ASSY 4200 ANO	17,40
	1500603624	RH ENDPLATE ASSY 4200 ANT	17,40
10	1500602219	LH+RH ENDCAP ROLLERTUBE 4200 / 4900	14,20
11	1500602374	LH+RH CONN LEAD RAIL 4200 / 4900	17,90
11A	1500602753	LH+RH STOP SPRING ARM 4200 / 4900	32,80
12	1500602665	SUPPORT ROLLER TUBE 4200 2M60	21,20
	1500602284	SUPPORT ROLLER TUBE 4200 3M00	22,30
	1500602285	SUPPORT ROLLER TUBE 4200 3M50	24,40
	1500602221	SUPPORT ROLLER TUBE 4200 4M00	27,20
	1500602222	SUPPORT ROLLER TUBE 4200 4M50	29,30
13	1500602223	SPRING SUPPORT ROLLER TUBE 4200 / 4900	8,60
14	1500602224	CONNECTION SUPPORT ARM 4200 / 4900	21,40
15	1500603625	KNOB SUPPORT ARM OVAL (2PCS)	10,60
16	1500603626	CONNECTION PCS TENSION RAFTER 4900	7,90
17	1500603627	SUPPORT LEG OVAL 2M60	55,40
	1500603628	SUPPORT LEG OVAL 3M00	60,00
	1500603629	SUPPORT LEG OVAL 3M50-4M50	70,10
18	1500602667	L.H. SPRING ARM 4200 ANO 2M60	152,20
	1500602229	L.H. SPRING ARM 4200 ANO 3,0/3,5M	158,80
	1500602230	L.H. SPRING ARM 4200 ANO 4,0/4,5M	158,80
19	1500602668	R.H. SPRING ARM 4200 ANO 2M60	152,20
	1500602231	R.H. SPRING ARM 4200 ANO 3,0/3,5M	158,80
	1500602232	R.H. SPRING ARM 4200 ANO 4,0/4,5M	158,80
20	1500603630	SPRING ARM HOLDERS 4200	5,80
21	1500602233	CENTRAL CLAMP SUPPORT ARM OVAL	5,10
22	1500602234	CLIP SUPPORT ARM OVAL	5,10
23	1500602235	LH+RH COVER SPRING ARM BR.	7,90
24	1500602811	ROTATION PLATE 4200 / 4900 / 6200	25,50

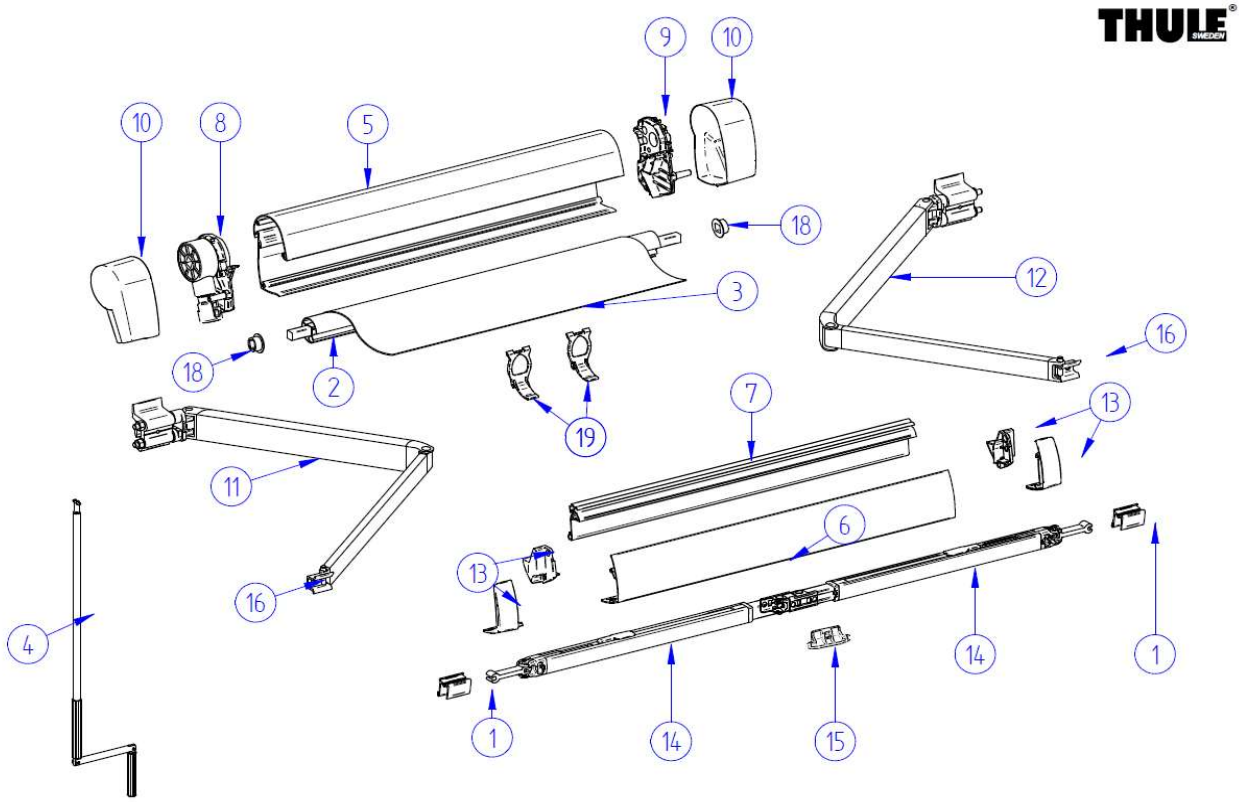

THULE Omnistor 5102/VW

VW 606-02

	ART.NR.	DESCRIPTION	RETAIL € (ex.VAT)
1	1500600296	CONNECT. SUPP. ARM V97 SERIE 5	Not available
2	1500601954	ROLLER TUBE ASSY 5102 2.6M	109,10
3	1500602356	FABRIC 2.60M VW T5 SILVER GREY	254,30
4	1500601124	HANDCRANK VW T5 + 5102	45,60
5	1500601689	MAIN HOUSING VW T5 RAL9006	195,20
	1500602357	MAIN HOUSING VW T5 RAL9011	195,20
6	1500601955	OUTSIDE LEAD RAIL VW T5 RAL9006	77,20
	1500602358	OUTSIDE LEAD RAIL VW T5 RAL9011	77,20
7	1500601956	INSIDE LEAD RAIL VW T5 RAL9006	77,90
	1500602359	INSIDE LEAD RAIL VW T5 RAL9011	77,90
8	1500601201	LH ENDPLATE + GEAR ASSY VW T5	75,30
9	1500601202	RH ENDPLATE MH VW T5	20,90
10	1500601203	LH+RH SIDECAP ASSY RAL9006	20,90
	1500601204	LH+RH SIDECAP ASSY RAL9011	20,90
11	1500602103	LH SPRINGARM COMPL 5102	181,30
12	1500602104	RH SPRINGARM COMPL 5102	181,30
13	1500601206	LH+RH LEAD RAIL END PLATE ASSY RAL9006	12,30
	1500601741	LH+RH LEAD RAIL END PLATE ASSY RAL9011	12,30
14	1500601960	SUPPORT ARM V2 2.60M XL	88,50
15	1500601789	CENTRAL CLAMP SUPPORT ARM V2	4,40
16	1500601219	LH+RH CONN.LEAD RAIL	30,50
	1500602754	LH+RH STOP SPRING ARM 5102	32,80
18	1500602755	LH+RH ROLLER BEARINGS 5102	7,60
19	1500603403	POSITIONER SPRING ARM VW 2PC	7,10

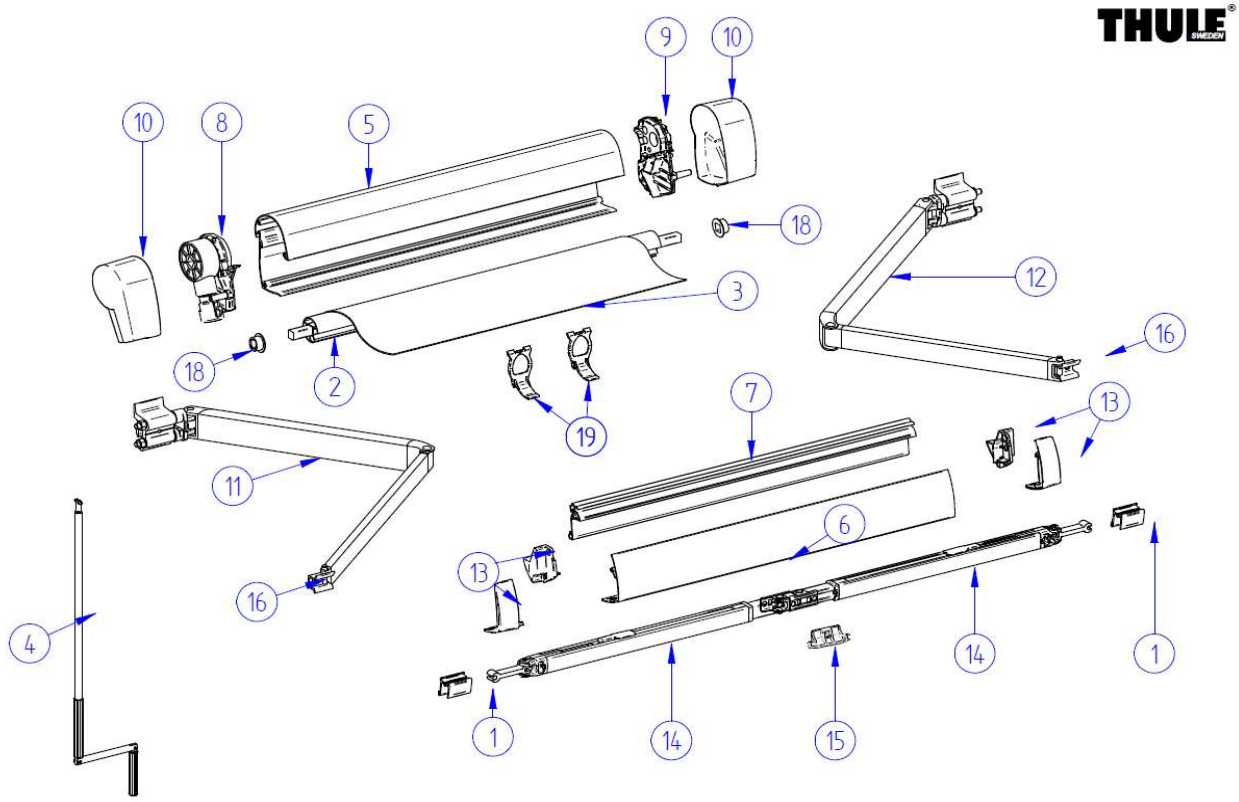

THULE Omnistor 5102/VW VW 606-02

	ART.NR.	DESCRIPTION	RETAIL € (ex.VAT)
1	1500600296	CONNECT. SUPP. ARM V97 SERIE 5	Not available
2	1500601954	ROLLER TUBE ASSY 5102 2.6M	109,10
3	1500600952	FABRIC 2.60M 5102 04	Not available
	1500602699	FABRIC 2.60M 5102 31	254,30
4	1500601124	HANDCRANK VW T5 + 5102	45,60
5	1500601689	MAIN HOUSING VW T5 RAL9006	195,20
	1500602357	MAIN HOUSING VW T5 RAL9011	195,20
6	1500601955	OUTSIDE LEAD RAIL 5102 RAL9006	77,20
	1500602358	OUTSIDE LEAD RAIL 5102 RAL9011	77,20
7	1500601956	INSIDE LEAD RAIL 5102 RAL9006	77,90
8	1500601201	LH ENDPLATE + GEAR ASSY VW T5	75,30
9	1500601202	RH ENDPLATE MH VW T5	20,90
10	1500601203	LH+RH SIDECAP ASSY 5102 RAL9006	20,90
	1500602702	LH+RH SIDECAP ASSY 5102 RAL9011	20,90
11	1500602103	LH SPRINGARM COMPL 5102	181,30
12	1500602104	RH SPRINGARM COMPL 5102	181,30
13	1500601206	LH+RH LEAD RAIL END PLATE ASSY 5102 RAL9006	12,30
	1500602703	LH+RH LEAD RAIL END PLATE ASSY 5102 RAL9011	12,30
14	1500601960	SUPPORT ARM V2 2.60M XL	88,50
15	1500601789	CENTRAL CLAMP SUPPORT ARM V2	4,40
16	1500601219	LH+RH CONN.LEAD RAIL	30,50
	1500602754	LH+RH STOP SPRING ARM 5102	32,80
17	301982	ADAPTER SET 5102 VWT5 LHD (not on image)	See price list
	301983	ADAPTER SET 5102 VWT5 RHD (not on image)	See price list
18	1500602755	LH+RH ROLLER BEARINGS 5102	7,60
19	1500603187	POSITIONER SPRING ARM 5102 2PC	6,30

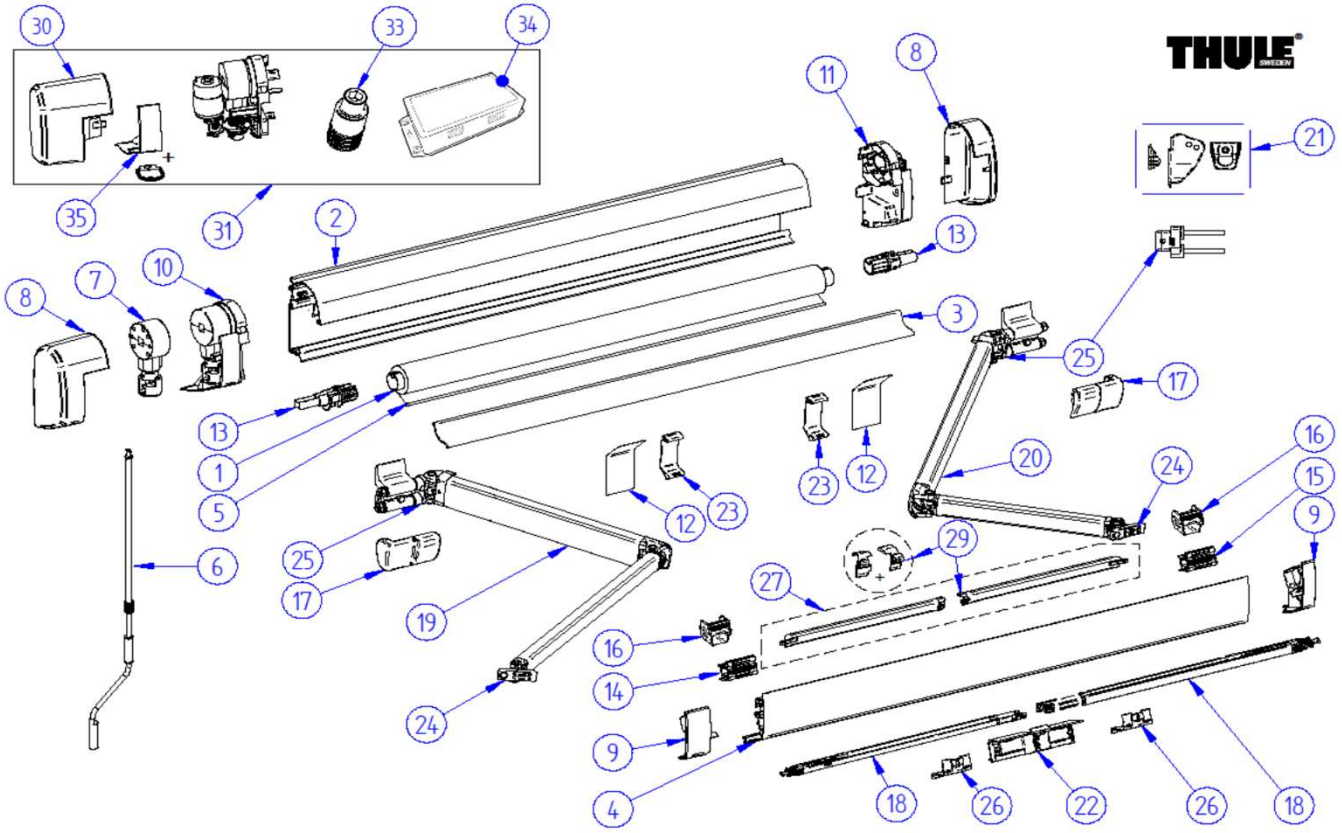

	ART.NR.	DESCRIPTION	RETAIL € (ex.VAT)
1	1500602989	ROLLER TUBE D=30X0.8MM / 5200-1.90M	52,80
	1500602990	ROLLER TUBE D=30X0.8MM / 5200-2,30M	55,40
	1500602658	ROLLER TUBE D=30X0.8MM / 5200-2,60M	60,00
	1500602186	ROLLER TUBE D=30X0.8MM / 5200-3.00M	66,60
	1500603562	ROLLER TUBE D=30X0.8MM / 5200-3.15M	75,50
	1500602187	ROLLER TUBE D=30X0.8MM / 5200-3.50M	75,50
	1500603567	ROLLER TUBE D=30X0.8MM / 5200-3.75M	84,70
	1500602188	ROLLER TUBE D=30X0.8MM / 5200-4.00M	84,70
	1500602189	ROLLER TUBE D=30X0.8MM / 5200-4.50M	93,90
	1500602991	ROLLER TUBE D=30X0.8MM / 5200-5.00M	103,30
2	1500602992	MAIN HOUSING 5200 1.90M	142,10
	1500602993	MAIN HOUSING 5200 2.30M	168,40
	1500602994	MAIN HOUSING 5200 2.60M	187,30
	1500602995	MAIN HOUSING 5200 3.00M	216,10
	1500602996	MAIN HOUSING 5200 3.50M	253,10
	1500602997	MAIN HOUSING 5200 4.00M	290,90
	1500602998	MAIN HOUSING 5200 4.50M	327,30
	1500602999	MAIN HOUSING 5200 5.00M	363,80
	1500603000	MAIN HOUSING 5200 ANO 1.90M	142,10
	1500603001	MAIN HOUSING 5200 ANO 2.30M	168,40
	1500603002	MAIN HOUSING 5200 ANO 2.60M	187,30
	1500603003	MAIN HOUSING 5200 ANO 3.00M	216,10
	1500603004	MAIN HOUSING 5200 ANO 3.50M	253,10
	1500603005	MAIN HOUSING 5200 ANO 4.00M	290,90
	1500603006	MAIN HOUSING 5200 ANO 4.50M	327,30
	1500603007	MAIN HOUSING 5200 ANO 5.00M	363,80
	1500603008	MAIN HOUSING 5200 ANTHR. 2.60M	216,10
	1500603009	MAIN HOUSING 5200 ANTHR. 3.00M	216,10
	1500603563	MAIN HOUSING 5200 ANTHR 3.15M	253,10

	1500603010	MAIN HOUSING 5200 ANTHR. 3.50M	253,10
	1500603568	MAIN HOUSING 5200 ANTHR 3.75M	290,90
	1500603011	MAIN HOUSING 5200 ANTHR. 4.00M	290,90
	1500603093	MAIN HOUSING 5200 ANTHR. 4.50M	327,30
	1500603468	MAIN HOUSING 5200 ANTHR. 5.00M	363,80
3	1500603531	ALU SUPP ROLLER TUBE 5200 2.60M	58,00
	1500603532	ALU SUPP ROLLER TUBE 5200 3.00M	62,10
	1500603564	ALU SUPP ROLLER TUBE 5200 3.15M	67,20
	1500603533	ALU SUPP ROLLER TUBE 5200 3.50M	67,20
	1500603569	ALU SUPP ROLLER TUBE 5200 3.75M	72,50
	1500603534	ALU SUPP ROLLER TUBE 5200 4.00M	72,50
	1500603535	ALU SUPP ROLLER TUBE 5200 4.50M	77,70
	1500603536	ALU SUPP ROLLER TUBE 5200 5.00M	83,10
	1500603537	ALU SUPP ROLLER TUBE 5200 5.00M (10 Pcs)	440,80
4	1500603015	LEAD RAIL 5200 1.90M	130,00
	1500603016	LEAD RAIL 5200 2.30M	150,50
	1500603017	LEAD RAIL 5200 2.60M	150,50
	1500603018	LEAD RAIL 5200 3.00M	173,50
	1500603019	LEAD RAIL 5200 3.50M	202,80
	1500603020	LEAD RAIL 5200 4.00M	234,00
	1500603021	LEAD RAIL 5200 4.50M	255,10
	1500603022	LEAD RAIL 5200 5.00M	276,70
	1500603023	LEAD RAIL 5200 ANO 1.90M	130,00
	1500603024	LEAD RAIL 5200 ANO 2.30M	150,50
	1500603025	LEAD RAIL 5200 ANO 2.60M	150,50
	1500603026	LEAD RAIL 5200 ANO 3.00M	173,50
	1500603027	LEAD RAIL 5200 ANO 3.50M	202,80
	1500603028	LEAD RAIL 5200 ANO 4.00M	234,00
	1500603029	LEAD RAIL 5200 ANO 4.50M	255,10
	1500603030	LEAD RAIL 5200 ANO 5.00M	276,70
	1500603031	LEAD RAIL 5200 ANTHR. 2.60M	150,50
	1500603032	LEAD RAIL 5200 ANTHR. 3.00M	173,50
	1500603565	LEAD RAIL 5200 ANTHR 3.15M	202,80
	1500603033	LEAD RAIL 5200 ANTHR. 3.50M	202,80
	1500603570	LEAD RAIL 5200 ANTHR 3.75M	234,00
	1500603034	LEAD RAIL 5200 ANTHR. 4.00M	234,00
	1500603094	LEAD RAIL 5200 ANTHR. 4.50M	255,10
	1500603469	LEAD RAIL 5200 ANTHR. 5.00M	276,70
5	1500603037	FABRIC 1.90M 5200 22 RAL 9002	162,40
	1500603038	FABRIC 1.90M 5200 31 MY GR	162,40
	1500603039	FABRIC 1.90M 5200 32 SA BL	162,40
	1500603042	FABRIC 2.30M 5200 22 RAL 9002	225,90
	1500603043	FABRIC 2.30M 5200 31 MY GR	225,90
	1500603044	FABRIC 2.30M 5200 32 SA BL	225,90
	1500603047	FABRIC 2.60M 5200 22 RAL9002	254,30
	1500602663	FABRIC 2.60M 5200 31 MY GR	254,30
	1500602664	FABRIC 2.60M 5200 32 SA BL	254,30
	1500603050	FABRIC 3.00M 5200 22 RAL9002	283,00
	1500602202	FABRIC 3.00M 5200 31 MY GR	283,00
	1500602203	FABRIC 3.00M 5200 32 SA BL	283,00
	1500603566	FABRIC 3.15M 5200 31 MY GR	314,50
	1500603053	FABRIC 3.50M 5200 22 RAL9002	314,50
	1500602204	FABRIC 3.50M 5200 31 MY GR	314,50
	1500602205	FABRIC 3.50M 5200 32 SA BL	314,50
	1500603571	FABRIC 3.75M 5200 31 MY GR	346,20
	1500603056	FABRIC 4.00M 5200 22 RAL 9002	346,20
	1500602206	FABRIC 4.00M 5200 31 MY GR	346,20
	1500602207	FABRIC 4.00M 5200 32 SA BL	346,20
	1500603059	FABRIC 4.50M 5200 22 RAL 9002	373,80
	1500602208	FABRIC 4.50M 5200 31 MY GR	373,80
	1500602209	FABRIC 4.50M 5200 32 SA BL	373,80
	1500603062	FABRIC 5.00M 5200 22 RAL 9002	400,90

	1500603063	FABRIC 5.00M 5200 31 MY GR	400,90
	1500603064	FABRIC 5.00M 5200 32 SA BL	400,90
6	1500602210	HAND CRANK ASSY SHORT	50,90
	1500603195	HAND CRANK ASSY SHORT 12V	61,60
7	1500601221	GEAR ASSY+COUPL.FUNNEL	55,20
8	1500603065	LH+RH ENDCAP MAINHOUSING 5200	20,90
	1500603066	LH+RH ENDC MAINHOUS 5200 ANO	20,90
	1500603067	LH+RH ENDC MAINHOUS 5200 ANTHR.	20,90
9	1500603068	LH+RH ENDCAP LEADRAIL 5200	15,10
	1500603069	LH+RH ENDCAP LEADRAIL 5200 ANO	15,10
	1500603070	LH+RH ENDCAP LEADRAIL 5200 ANTHR.	15,10
10	1500603071	LH ENDPLATE ASSY 5200 WH	69,80
	1500603095	LH ENDPLATE ASSY 5200 ANO	69,80
	1500603097	LH ENDPLATE ASSY 5200 ANTR	69,80
11	1500603072	RH ENDPLATE ASSY 5200 WH	16,00
	1500603096	RH ENDPLATE ASSY 5200 ANO	16,00
	1500603098	RH ENDPLATE ASSY 5200 ANTR	16,00
12	1500603073	SPRING SUPPORT ROLLER TUBE 5200	8,60
13	1500602219	LH+RH ENDCAP ROLLER TUBE 5200	14,20
14	1500603074	LH CONN SUPPORT ARM 5200	17,20
15	1500603075	RH CONN SUPPORT ARM 5200	17,20
16	1500603076	INSERT LEAD RAIL 5200 2PC	9,10
17	1500602612	LH+RH COVER SPRING ARM BR.	11,10
18	1500603077	SUPPORT ARM 5200 1.90M	88,50
	1500603078	SUPPORT ARM 5200 2.30M	88,50
	1500603079	SUPPORT ARM 5200 2.60M XL	88,50
	1500603080	SUPPORT ARM 5200 3.00-3.15M	80,30
	1500603081	SUPPORT ARM 5200 3.50-5.00M	80,30
19	1500603082	L.H. SPRING ARM COMPL. 5200 - 1.90M	167,50
	1500603083	L.H. SPRING ARM COMPL. 5200 - 2.30M	178,10
	1500603084	L.H. SPRING ARM COMPL. 5200 - 2.60M	181,30
	1500603085	L.H. SPRING ARM COMPL. 5200 ≥ 3.00M	188,90
20	1500603086	R.H. SPRING ARM COMPL. 5200 - 1.90M	167,50
	1500603087	R.H. SPRING ARM COMPL. 5200 - 2.30M	178,10
	1500603088	R.H. SPRING ARM COMPL. 5200 - 2.60M	181,30
	1500603089	R.H. SPRING ARM COMPL. 5200 ≥ 3.00M	188,90
21	1500603099	POSIT. PIECE + TR HOLDER 5200	12,10
22	1500603090	CENTRAL CLAMP SUPPORT ARM 5200	12,60
23	1500602327	POSITIONER SPRING ARM - 2PC	9,10
24	1500603091	CONN LEAD RAIL 5200 - 2PC	20,40
	1500603344	LH+RH STOP SPRING ARM 5200	32,80
25	1500602811	ROTATION PLATE 5200 / 6200	25,50
26	1500603092	CLIP SUPPORT ARM 5200 - 2PC	9,10
27	301659	INTEGRATED TENSION ARMS 5200	See price list
28	1500603166	NOISE REDUCTION 5200	0,00
29	1500603345	LH+RH END CAP TENSION ARMS 5200	7,60
30	1500603189	LH+RH ENDCAP MAINHOUSING 5200 12V WH	23,50
	1500603190	LH+RH ENDC MAINHOUSING 5200 12V ANO	23,50
	1500603191	LH+RH ENDC MAINHOUSING 5200 12V ANTHR.	23,50
31	301296	12V MOTOR ASSY 5200 WHITE	See price list
	301297	12V MOTOR ASSY 5200 ANO	See price list
	301298	12V MOTOR ASSY 5200 ANTHR.	See price list
33	1500603196	CRANK PIN 12V	22,70
34	1500603197	PANEL SET 5200 12V	142,30
35	1500603198	PLUG & GEAR COVER WHITE	10,60
	1500603199	PLUG & GEAR COVER ANO	10,60
	1500603200	PLUG & GEAR COVER ANTHR.	10,60
36	1500603201	SWITCH 12V MOTOR 5200	46,60
37	1500601613	FLAT ADAPTER SET 5200 1.90M-3.00M	40,30
	1500601614	FLAT ADAPTER SET 5200 3.50M	59,70
	1500601615	FLAT ADAPTER SET 5200 4.00M	59,70
	1500601616	FLAT ADAPT SET 5200 4.50-5.00M	74,10

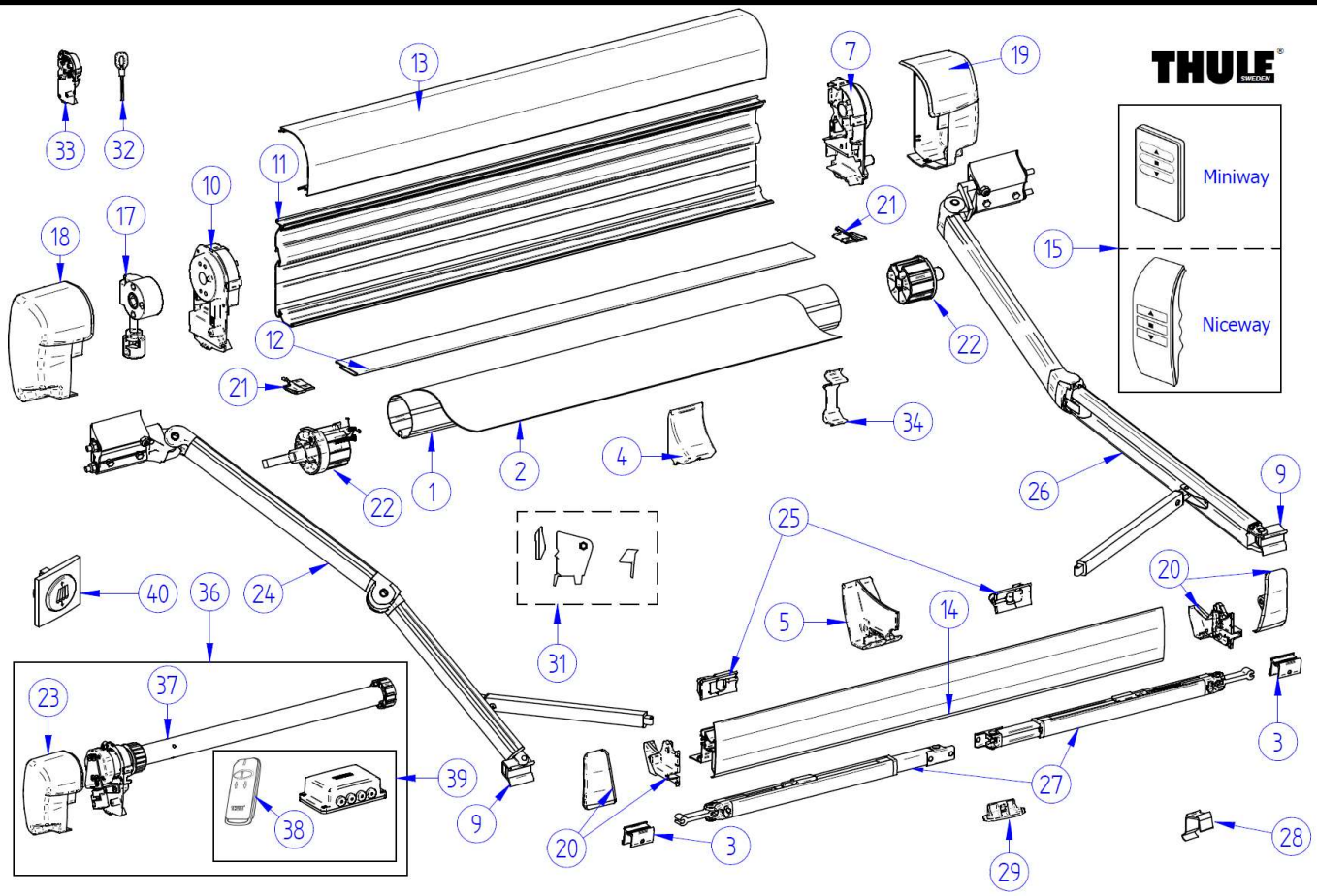

THULE Omnistor 8000 5AP 606-03

	ART.NR.	DESCRIPTION	RETAIL € (ex.VAT)
1	1500601797	ROLLER TUBE 70 / 8000 -3,50M	80,30
	1500601798	ROLLER TUBE 70 / 8000 -4,00M	80,30
	1500601799	ROLLER TUBE 70 / 8000 -4,50M	90,50
	1500601800	ROLLER TUBE 70 / 8000 -5,00M	100,70
	1500601801	ROLLER TUBE 70 / 8000 -5,50M	111,30
	1500601802	ROLLER TUBE 70 / 8000 -6,00M	122,00
2	1500601832	FABRIC 3,50M 8000 31	314,50
	1500601833	FABRIC 3,50M 8000 32	314,50
	1500600082	FABRIC 4.00M 8000 22 RAL 9002	381,00
	1500601701	FABRIC 4.00M 8000 31	381,00
	1500601702	FABRIC 4.00M 8000 32	381,00
	1500600089	FABRIC 4.50M 8000 22 RAL 9002	416,00
	1500601703	FABRIC 4.50M 8000 31	416,00
	1500601704	FABRIC 4.50M 8000 32	416,00
	1500601705	FABRIC 5.00M 8000 31	451,00
	1500601706	FABRIC 5.00M 8000 32	451,00
	1500600104	FABRIC 5.50M 8000 22 RAL 9002	485,80
	1500601707	FABRIC 5.50M 8000 31	485,80
	1500601708	FABRIC 5.50M 8000 32	485,80
	1500600111	FABRIC 6.00M 8000 22 RAL 9002	520,20
	1500601686	FABRIC 6.00M 8000 31	520,20
	1500601709	FABRIC 6.00M 8000 32	520,20
3	1500601602	CONNECT. SUPP. ARM	5,10
4	1500600325	LEAD RAIL HOLD DOWN 8000	6,10
5	1500600326	GLIDING ANGLE LEAD RAIL 8000	4,10
6	1500600863	RELAIS + FEET MOTOR 8000 220V	38,60
7	1500600865	RH MAIN HOUS.END PL. ASSY 8000	33,80
	1500600867	RH ENDPLATE 8000 220V	20,90
8	1500601834	L.H. END PLATE ASSY 8000-220V	Not available

9	1500601259	LH+RH CONN.LEAD RAIL	33,00
	1500602760	LH+RH STOP SPRING ARM 8000 / 9200	35,30
10	1500600871	L.H. END PLATE ASSY 8000	88,50
11	1500602049	BACK HOUSING 8000 - 3,50M	219,40
	1500600890	BACK HOUSING 8000 - 4.00 M	219,40
	1500600891	BACK HOUSING 8000 - 4.50M	246,60
	1500600892	BACK HOUSING 8000 - 5.00M	273,90
	1500600893	BACK HOUSING 8000 - 5.50M	301,20
	1500600894	BACK HOUSING 8000 - 6.00M	328,90
	1500602050	BACK HOUSING 8000 ANO - 3,50M	219,40
	1500600910	BACK HOUSING 8000 ANO - 4.00M	219,40
	1500600911	BACK HOUSING 8000 ANO - 4.50M	246,60
	1500600912	BACK HOUSING 8000 ANO - 5.00M	273,90
	1500600913	BACK HOUSING 8000 ANO - 5.50M	301,20
	1500600914	BACK HOUSING 8000 ANO - 6.00M	328,90
	1500602289	BACK HOUSING 8000 - 4.00 M RAL9002	219,40
	1500602290	BACK HOUSING 8000 - 4.50 M RAL9002	246,60
	1500602291	BACK HOUSING 8000 - 5.00 M RAL9002	273,90
	1500602292	BACK HOUSING 8000 - 5.50 M RAL9002	301,20
	1500602293	BACK HOUSING 8000 - 6.00 M RAL9002	328,90
	1500603357	BACK HOUSING 8000 ANT - 5.00M	273,90
	1500603358	BACK HOUSING 8000 ANT - 5.50M	301,20
	1500603359	BACK HOUSING 8000 ANT - 6.00M	328,90
12	1500602051	MAINHOUSING BOTTOM 8000 - 3,50M	54,90
	1500600895	MAINHOUSING BOTTOM 8000 - 4.00M	54,90
	1500600896	MAINHOUSING BOTTOM 8000 - 4.50M	61,50
	1500600897	MAINHOUSING BOTTOM 8000 - 5.00M	68,70
	1500600898	MAINHOUSING BOTTOM 8000 - 5.50M	76,80
	1500600899	MAINHOUSING BOTTOM 8000 - 6.00M	85,40
	1500602052	MAINHOUSING BOTTOM 8000 ANO - 3,50M	54,90
	1500600915	MAINHOUSING BOTTOM 8000 ANO - 4.00M	54,90
	1500600916	MAINHOUSING BOTTOM 8000 ANO - 4.50M	61,50
	1500600917	MAINHOUSING BOTTOM 8000 ANO - 5.00M	68,70
	1500600918	MAINHOUSING BOTTOM 8000 ANO - 5.50M	76,80
	1500600919	MAINHOUSING BOTTOM 8000 ANO - 6.00M	85,40
	1500602294	MAINHOUSING BOTTOM 8000 RAL9002 - 4.00M	54,90
	1500602295	MAINHOUSING BOTTOM 8000 RAL9002 - 4.50M	61,50
	1500602296	MAINHOUSING BOTTOM 8000 RAL9002 - 5.00M	68,70
	1500602297	MAINHOUSING BOTTOM 8000 RAL9002 - 5.50M	76,80
	1500602298	MAINHOUSING BOTTOM 8000 RAL9002 - 6.00M	85,40
	1500603360	MAINHOUSING BOTTOM 8000 ANT - 5.00M	68,70
	1500603361	MAINHOUSING BOTTOM 8000 ANT - 5.50M	76,80
	1500603362	MAINHOUSING BOTTOM 8000 ANT - 6.00M	85,40
13	1500602053	ROOFHOUSING 8000 - 3,50M	145,70
	1500600900	ROOFHOUSING 8000 - 4.00M	145,70
	1500600901	ROOFHOUSING 8000 - 4.50M	163,70
	1500600902	ROOFHOUSING 8000 - 5.00M	182,10
	1500600903	ROOFHOUSING 8000 - 5.50M	200,10
	1500600904	ROOFHOUSING 8000 - 6.00M	218,30
	1500602054	ROOFHOUSING 8000 ANO - 3,50M	145,70
	1500600920	ROOFHOUSING 8000 ANO - 4.00M	145,70
	1500600921	ROOFHOUSING 8000 ANO - 4.50M	163,70
	1500600922	ROOFHOUSING 8000 ANO - 5.00M	182,10
	1500600923	ROOFHOUSING 8000 ANO - 5.50M	200,10
	1500600924	ROOFHOUSING 8000 ANO - 6.00M	218,30
	1500602299	ROOFHOUSING 8000 RAL9002 - 4.00M	145,70
	1500602300	ROOFHOUSING 8000 RAL9002 - 4.50M	163,70
	1500602301	ROOFHOUSING 8000 RAL9002 - 5.00M	182,10
	1500602302	ROOFHOUSING 8000 RAL9002 - 5.50M	200,10
	1500602303	ROOFHOUSING 8000 RAL9002 - 6.00M	218,30
	1500603363	ROOFHOUSING 8000 ANT - 5.00M	182,10
	1500603364	ROOFHOUSING 8000 ANT - 5.50M	200,10

	1500603365	ROOFHOUSING 8000 ANT - 6.00M	218,30
14	1500602055	LEADRAIL 8000 - 3,50M	205,00
	1500600905	LEADRAIL 8000 - 4.00M	205,00
	1500600906	LEADRAIL 8000 - 4.50M	230,90
	1500600907	LEADRAIL 8000 - 5.00M	257,40
	1500600908	LEADRAIL 8000 - 5.50M	283,00
	1500600909	LEADRAIL 8000 - 6.00M	306,50
	1500602056	LEADRAIL 8000 ANO - 3,50M	205,00
	1500600925	LEADRAIL 8000 ANO - 4.00M	205,00
	1500600926	LEADRAIL 8000 ANO - 4.50M	230,90
	1500600927	LEADRAIL 8000 ANO - 5.00M	257,40
	1500600928	LEADRAIL 8000 ANO - 5.50M	283,00
	1500600929	LEADRAIL 8000 ANO - 6.00M	306,50
	1500602304	LEAD RAIL 8000 - 4,00M RAL9002	205,00
	1500602305	LEAD RAIL 8000 - 4,50M RAL9002	230,90
	1500602306	LEAD RAIL 8000 - 5,00M RAL9002	257,40
	1500602283	LEAD RAIL 8000 - 5,50M RAL9002	283,00
	1500602308	LEAD RAIL 8000 - 6,00M RAL9002	306,50
	1500603366	LEADRAIL 8000 ANT - 5.00M	257,40
	1500603367	LEADRAIL 8000 ANT - 5.50M	283,00
	1500603368	LEADRAIL 8000 ANT - 6.00M	306,50
15	1500601129	REMOTE CONTROL NICEWAY	119,50
	1500603176	REMOTE CONTROL MINIWAY	94,40
16	1500601207	HAND CRANK ASSY SHORT	Not available
17	1500601210	GEAR ASSY+COUPLING FUNNEL 8000	55,20
18	1500601249	LH ENDCAP MAINHOUSING 8000	11,60
	1500601250	LH ENDCAP MAINHOUSING 8000 ANO	31,00
	1500602286	LH ENDCAP MAINHOUSING 8000 RAL9002	31,00
	1500603369	LH ENDCAP MAINHOUSING 8000 ANT	31,00
19	1500601251	RH ENDCAP MAINHOUSING 8000	11,60
	1500601252	RH ENDCAP MAINHOUSING 8000 ANO	31,00
	1500602287	RH ENDCAP MAINHOUSING 8000 RAL9002	31,00
	1500603370	RH ENDCAP MAINHOUSING 8000 ANT	31,00
20	1500601254	LH+RH LEAD RAIL END PLATE 8000	11,10
	1500601255	LH+RH LEAD RAIL ENDPL.8000 ANO	29,50
	1500602288	LH+RH LEAD RAIL ENDPL.8000 RAL9002	29,50
	1500603371	LH+RH LEAD RAIL ENDPL.8000 ANT	29,80
21	1500601256	LH+RH SIDE CAP MH BOTTOM 8000	6,70
	1500601257	LH+RH SIDECAP MH BOTT.8000 ANO	17,70
	1500603783	LH+RH SIDECAP MH BOTT.8000 ANT	17,70
22	1500601258	LH+RH ROLLER TUBE ASSY 8000	17,70
23	1500601260	LH ENDCAP MH 8000 230V	11,60
	1500601261	LH ENDCAP MH 8000 230V ANO	31,00
	1500602757	LH ENDCAP MH 8000 230V RAL9002	31,00
	1500603372	LH ENDCAP MH 8000 230V ANT	31,00
24	1500602059	L.H. SPRING ARM COMPL. 8000 ≥4,00M	233,80
	1500602057	L.H. SPRING ARM 8000 - 3,50M	226,10
25	1500601298	LH & RH GLIDING PIECES TENSION ARMS	25,80
26	1500602060	R.H.SPR.ARM COMPL. 8000 ≥4,00M	233,80
	1500602058	RH. SPRING ARM 8000 - 3,50M	226,10
27	1500601612	SUPPORT ARM V2 3.50M	80,30
	1500601312	SUPPORT ARM V2 LARGE	88,50
28	1500602342	ANTI RATTLING SUPPORT ARM	9,10
29	1500601789	CENTRAL CLAMP SUPPORT ARM V2	4,40
31	1500601399	CONNECTION PCS TENSION RAFTER 8000	9,10
32	1500602375	EMERGENCY HAND CRANK 8000	28,10
33	1500602391	LH END PLATE HOUSING 8000 220V	36,30
34	1500602327	SPRING ARM PROTECTION KIT 8000	9,10
35	1500603402	FLAT ADAPTER SET 8000	78,40
36	302645	MOTOR KIT TO 8000 - EM 230V WHITE	See price list
	302646	MOTOR KIT TO 8000 - EM 230V ANO	See price list
	302647	MOTOR KIT TO 8000 - EM 230V RAL9002	See price list

	302648	MOTOR KIT TO 8000 - EM 230V ANT	See price list
37	1500603673	MOTOR 230V EM 8000	270,80
38	1500603579	REMOTE CONTROL MOTOR 230V	98,80
39	1500603672	CONTROL BOX 230V EM (REMOTE CONTROL INCL.)	309,90
40	1500603578	CONTROL SWITCH 230V MOTOR	37,60

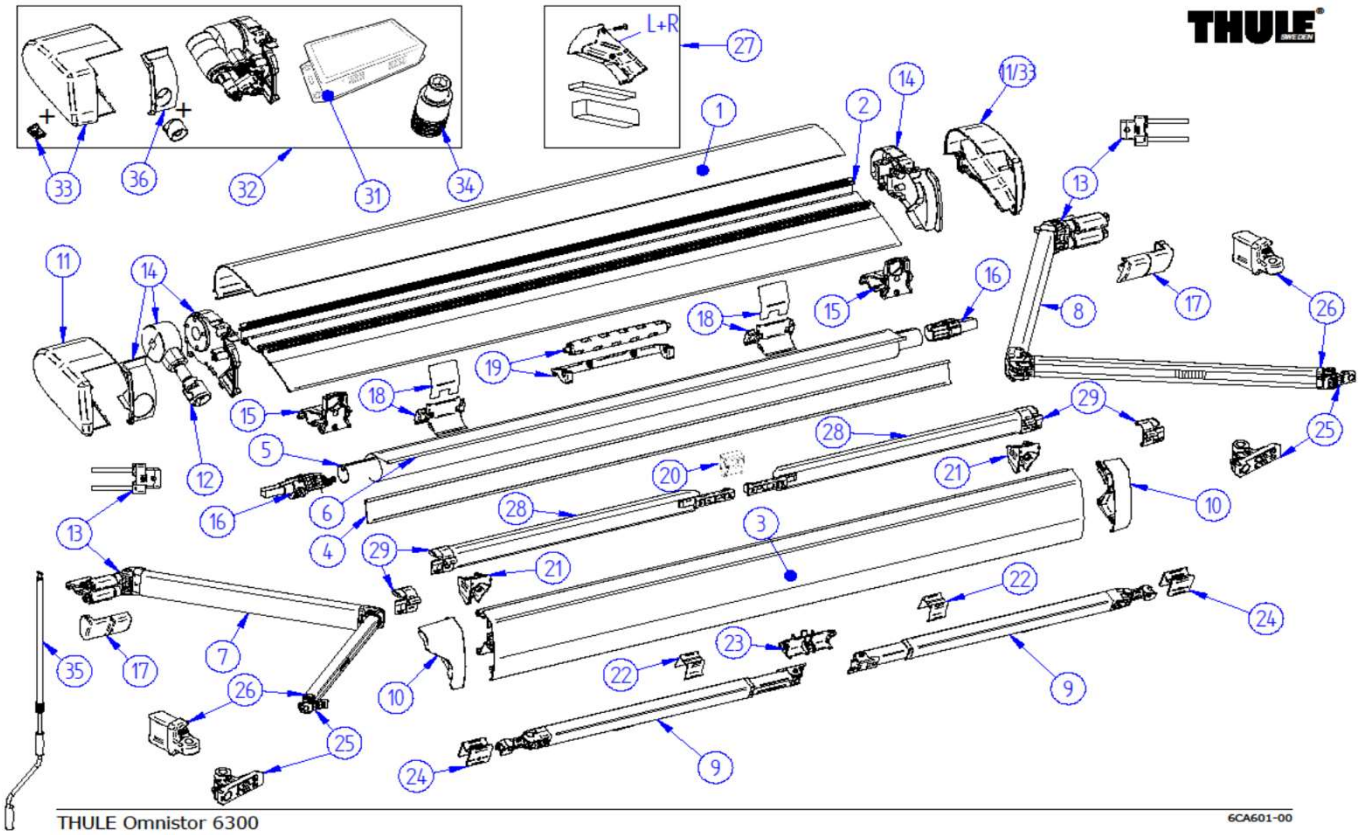

	ART.NR.	DESCRIPTION	RETAIL € (ex.VAT)
1	1500603256	COVER HOUSING 6300 2,60M WHITE	123,20
	1500603257	COVER HOUSING 6300 3,00M WHITE	142,10
	1500603258	COVER HOUSING 6300 3,25M WHITE	165,30
	1500603259	COVER HOUSING 6300 3,50M WHITE	165,30
	1500603260	COVER HOUSING 6300 3,75M WHITE	190,50
	1500603261	COVER HOUSING 6300 4,00M WHITE	190,50
	1500603262	COVER HOUSING 6300 4,25M WHITE	222,90
	1500603263	COVER HOUSING 6300 4,50M WHITE	222,90
	1500603264	COVER HOUSING 6300 5,00M WHITE	255,30
	1500603265	COVER HOUSING 6300 3,25M ANO	165,30
	1500603266	COVER HOUSING 6300 3,50M ANO	165,30
	1500603267	COVER HOUSING 6300 3,75M ANO	190,50
	1500603268	COVER HOUSING 6300 4,00M ANO	190,50
	1500603269	COVER HOUSING 6300 4,50M ANO	222,90
	1500603270	COVER HOUSING 6300 5,00M ANO	255,30
	1500603271	COVER HOUSING 6300 2,60M ANTHR.	123,20
	1500603272	COVER HOUSING 6300 3,00M ANTHR.	142,10
	1500603273	COVER HOUSING 6300 3,25M ANTHR.	165,30
	1500603274	COVER HOUSING 6300 3,50M ANTHR.	165,30
	1500603275	COVER HOUSING 6300 3,75M ANTHR.	190,50
	1500603276	COVER HOUSING 6300 4,00M ANTHR.	190,50
	1500603470	COVER HOUSING 6300 4,25M ANTHR.	222,90
	1500603277	COVER HOUSING 6300 4,50M ANTHR.	222,90
	1500603278	COVER HOUSING 6300 5,00M ANTHR.	255,30
2	1500603279	BACK HOUSING 6200 2,60M	156,80
	1500603280	BACK HOUSING 6300 3,00M	184,20
	1500603281	BACK HOUSING 6300 3,25M	211,00
	1500603282	BACK HOUSING 6300 3,50M	211,00
	1500603283	BACK HOUSING 6300 3,75M	237,40

	1500603284	BACK HOUSING 6300 4,00M	237,40
	1500603285	BACK HOUSING 6300 4,25M	257,40
	1500603286	BACK HOUSING 6300 4,50M	257,40
	1500603287	BACK HOUSING 6300 5,00M	277,30
3	1500603288	LEAD RAIL 6300 2,60M WHITE	150,50
	1500603289	LEAD RAIL 6300 3,00M WHITE	173,50
	1500603290	LEAD RAIL 6300 3,25M WHITE	202,80
	1500603291	LEAD RAIL 6300 3,50M WHITE	202,80
	1500603292	LEAD RAIL 6300 3,75M WHITE	234,00
	1500603293	LEAD RAIL 6300 4,00M WHITE	234,00
	1500603294	LEAD RAIL 6300 4,25M WHITE	255,10
	1500603295	LEAD RAIL 6300 4,50M WHITE	255,10
	1500603296	LEAD RAIL 6300 5,00M WHITE	276,70
	1500603297	LEAD RAIL 6300 3,25M ANO	202,80
	1500603298	LEAD RAIL 6300 3,50M ANO	202,80
	1500603299	LEAD RAIL 6300 3,75M ANO	234,00
	1500603300	LEAD RAIL 6300 4,00M ANO	234,00
	1500603301	LEAD RAIL 6300 4,50M ANO	255,10
	1500603302	LEAD RAIL 6300 5,00M ANO	276,70
	1500603303	LEAD RAIL 6300 2,60M ANTHR.	150,50
	1500603304	LEAD RAIL 6300 3,00M ANTHR.	173,50
	1500603305	LEAD RAIL 6300 3,25M ANTHR.	202,80
	1500603306	LEAD RAIL 6300 3,50M ANTHR.	202,80
	1500603307	LEAD RAIL 6300 3,75M ANTHR.	234,00
	1500603308	LEAD RAIL 6300 4,00M ANTHR.	234,00
	1500603471	LEAD RAIL 6300 4,25M ANTHR.	255,10
	1500603309	LEAD RAIL 6300 4,50M ANTHR.	255,10
	1500603310	LEAD RAIL 6300 5,00M ANTHR.	276,70
4	1500603311	ALU SUPPORT ROLLER TUBE 6300 2,60M	52,20
	1500603312	ALU SUPPORT ROLLER TUBE 6300 3,00M	52,20
	1500603313	ALU SUPPORT ROLLER TUBE 6300 3,25M	58,40
	1500603314	ALU SUPPORT ROLLER TUBE 6300 3,50M	60,70
	1500603315	ALU SUPPORT ROLLER TUBE 6300 3,75M	63,30
	1500603316	ALU SUPPORT ROLLER TUBE 6300 4,00M	65,80
	1500603317	ALU SUPPORT ROLLER TUBE 6300 4,25M	68,00
	1500603318	ALU SUPPORT ROLLER TUBE 6300 4,50M	70,30
	1500603319	ALU SUPPORT ROLLER TUBE 6300 5,00M	75,40
5	1500602554	ROLLER TUBE D=30 / 6300 2,60M	58,20
	1500602555	ROLLER TUBE D=30 / 6300 3.00M	66,60
	1500602556	ROLLER TUBE D=30 / 6300 3,25M	75,50
	1500602557	ROLLER TUBE D=30 / 6300 3,50M	75,50
	1500602558	ROLLER TUBE D=30 / 6300 3,75M	84,70
	1500602559	ROLLER TUBE D=30 / 6300 4.00M	84,70
	1500602870	ROLLER TUBE D=30 / 6300 4,25M	93,90
	1500602560	ROLLER TUBE D=30 / 6300 4.50M	93,90
	1500602871	ROLLER TUBE D=30 / 6300 5,00M	103,30
6	1500602663	FABRIC 2,60M 6300 31	254,30
	1500602664	FABRIC 2,60M 6300 32	254,30
	1500603805	FABRIC 2,80M 6300 31	268,70
	1500602202	FABRIC 3,00M 6300 31	283,00
	1500602203	FABRIC 3,00M 6300 32	283,00
	1500603320	FABRIC 3,25M 6300 31	314,50
	1500603321	FABRIC 3,25M 6300 32	314,50
	1500602204	FABRIC 3,50M 6300 31	314,50
	1500602205	FABRIC 3,50M 6300 32	314,50
	1500603322	FABRIC 3,75M 6300 31	346,20
	1500603323	FABRIC 3,75M 6300 32	346,20
	1500602206	FABRIC 4,00M 6300 31	346,20
	1500602207	FABRIC 4,00M 6300 32	346,20
	1500603324	FABRIC 4,25M 6300 31	373,80
	1500603325	FABRIC 4,25M 6300 32	373,80
	1500602208	FABRIC 4,50M 6300 31	373,80

	1500602209	FABRIC 4,50M 6300 32	373,80
	1500603063	FABRIC 5,00M 6300 31	400,90
	1500603064	FABRIC 5,00M 6300 32	400,90
7	1500603326	L.H. SPRING ARM 6300 2,60M	181,30
	1500603327	L.H. SPRING ARM 6300 3,0/5,0M	188,90
8	1500603328	R.H. SPRING ARM 6300 2,60M	181,30
	1500603329	R.H. SPRING ARM 6300 3,0/5,0M	188,90
9	1500603330	SUPPORT ARM 6300 2.60M XL	88,50
	1500603331	SUPPORT ARM 6300 3.00-3,25M	80,30
	1500603332	SUPPORT ARM 6300 3.50-4.50M	80,30
10	1500603333	LH+RH ENDCAP LEADRAIL 6300 WHITE	15,10
	1500603334	LH+RH ENDCAP LEADRAIL 6300 ANO	15,10
	1500603335	LH+RH ENDCAP LEADRAIL 6300 ANTHR.	15,10
11	1500603336	LH+RH ENDCAP MAINHOUSING 6300 WHITE	20,90
	1500603337	LH+RH ENDCAP MAINHOUSING 6300 ANO	20,90
	1500603338	LH+RH ENDCAP MAINHOUSING 6300 ANTHR	20,90
12	1500602606	GEAR ASSY+COUPL.FUNN 6200 /6300	55,20
13	1500602811	ROTATION PLATE 4900/ 5200 / 6200 / 6300	25,50
14	1500603339	LH+RH ENDPLATE ASSY 6300 WHITE	85,40
	1500603340	LH+RH ENDPLATE ASSY 6300 ANO	85,40
	1500603341	LH+RH ENDPLATE ASSY 6300 ANTHR	85,40
15	1500602610	HOUSING CON.PCE TENSION RAFTER 6200	9,10
16	1500602611	LH+RH ENDCAP ROLLER TUBE 6200	14,40
17	1500602612	LH+RH COVER SUPPORT SPRING ARM 6200	11,10
18	1500602613	SPRING & SUPPORT 6200	11,90
19	1500603353	CENTER SUPPORT ROLLER TUBE 6300	29,50
20	1500603112	POSIT. BLOCK + TENS. RAFTER HOUSING 6200 1+1PC	10,90
21	1500602616	INSERT LEAD RAIL 6200 2PC	9,10
22	1500602502	ANTI RATTLING SUPPORT ARM 6200/9200	9,10
23	1500603342	CENTRAL CLAMP SUPPORT ARM 6300	8,50
24	1500603343	LH & RH CONNECTION SUPPORT ARM 6300	8,20
25	1500603091	CONN LEAD RAIL 5200 - 2PC	20,40
26	1500603344	LH+RH STOP SPRING ARM 6300	32,80
27	1500603178	END CAPS COVERS DUCATO	11,30
28	302095	INTEGRATED TENSION ARMS 6300	See price list
29	1500603345	LH+RH ENDCAP TENSION ARM 6300	7,60
31	1500603346	PANEL SET 6300 12V	142,30
32	302096	12V MOTOR ASSY 5200 WHITE	See price list
	302097	12V MOTOR ASSY 5200 ANO	See price list
	302098	12V MOTOR ASSY 5200 ANTHR.	See price list
33	1500603347	LH+RH ENDCAP 12V MOTOR 6300 WHITE	23,50
	1500603348	LH+RH ENDCAP 12V MOTOR 6300 ANO	23,50
	1500603349	LH+RH ENDCAP 12V MOTOR 6300 ANTHR	23,50
34	1500603196	UPPER CRANK PIN 5200 12V	22,70
35	1500600115	HAND CRANK ASSY LONG	56,40
	1500603195	HAND CRANK ASSY SHORT 12V	61,60
36	1500603350	PLUG & GEAR COVER WHITE	11,40
	1500603351	PLUG & GEAR COVER ANO	11,40
	1500603352	PLUG & GEAR COVER ANTHR.	11,40
37	1500603201	SWITCH 12V MOTOR 6300	46,60
38	1500603354	EPDM SEALING PROFILE 18MM (2x2,00M)	44,00
39	1500603356	SEALING ROPE LEAD RAIL 6300	22,10

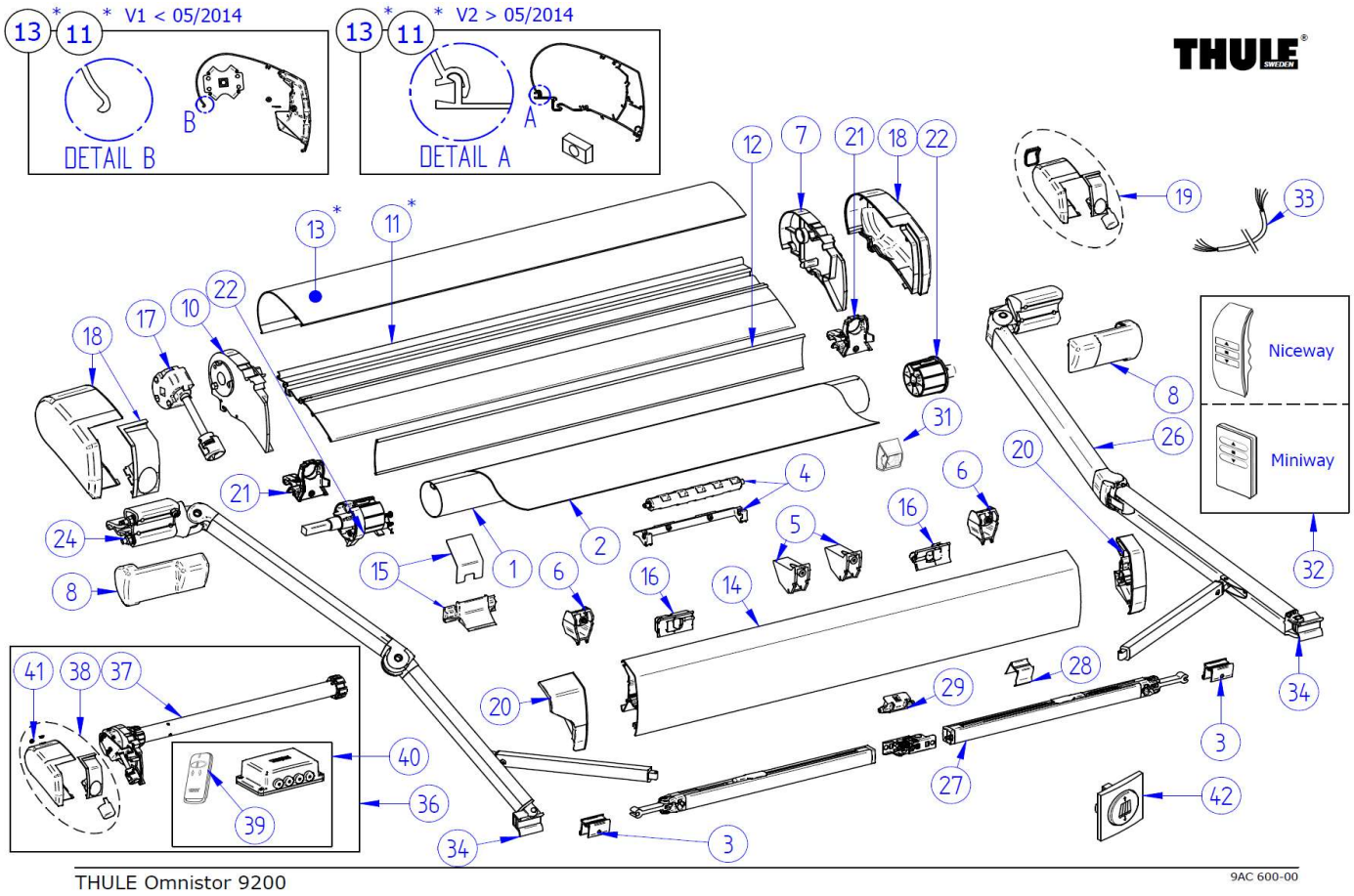

	ART.NR.	DESCRIPTION	RETAIL € (ex.VAT)
1	1500602617	ROLLER TUBE D=63 / 9200-4.00M	85,70
	1500602618	ROLLER TUBE D=63 / 9200-4.50M	95,50
	1500602417	ROLLER TUBE D=63 / 9200-5,00M	104,50
	1500602418	ROLLER TUBE D=63 / 9200-5,50M	113,90
	1500602419	ROLLER TUBE D=63 / 9200-6,00M	123,40
2	1500602422	FABRIC 4.00M 9200 22	419,70
	1500602423	FABRIC 4.00M 9200 31	419,70
	1500602424	FABRIC 4.00M 9200 32	419,70
	1500602427	FABRIC 4.50M 9200 22	457,00
	1500602428	FABRIC 4.50M 9200 31	457,00
	1500602429	FABRIC 4.50M 9200 32	457,00
	1500602432	FABRIC 5,00M 9200 22	496,00
	1500602433	FABRIC 5,00M 9200 31	496,00
	1500602434	FABRIC 5,00M 9200 32	496,00
	1500602437	FABRIC 5,50M 9200 22	533,90
	1500602438	FABRIC 5,50M 9200 31	533,90
	1500602439	FABRIC 5,50M 9200 32	533,90
	1500602442	FABRIC 6,00M 9200 22	572,80
	1500602443	FABRIC 6,00M 9200 31	572,80
	1500602444	FABRIC 6,00M 9200 32	572,80
3	1500601602	LH & RH CONNECTION SUPPORT ARM	5,10
4	1500602445	CENTER SUPPORT ROLLER TUBE 9200	29,50
5	1500602446	GLIDING ANGLE LEAD RAIL 9200	9,10
6	1500602447	INSERT LEAD RAIL 9200 2PC	9,10
7	1500602448	RH ENDPLATE ASSY 9200	35,10
8	1500602449	LH+RH COVER SUPPORT SPRING ARM 9200	11,90
10	1500602450	LH ENDPLATE ASSY 9200	35,10
11	1500602812	BACK HOUSING 9200 4,00M V2	282,50
	1500602813	BACK HOUSING 9200 4,50M V2	317,90

	1500602814	BACK HOUSING 9200 5,00M V2	353,10
	1500602815	BACK HOUSING 9200 5,50M V2	388,50
	1500602816	BACK HOUSING 9200 6,00M V2	419,70
12	1500602456	SUPPORT ROLLER TUBE 9200 4,00M	65,60
	1500602457	SUPPORT ROLLER TUBE 9200 4,50M	76,40
	1500602458	SUPPORT ROLLER TUBE 9200 5,00M	87,10
	1500602459	SUPPORT ROLLER TUBE 9200 5,50M	98,00
	1500602460	SUPPORT ROLLER TUBE 9200 6,00M	109,10
13V1	1500602461	COVER HOUSING 9200 4,00M WHITE V1	Not available
	1500602462	COVER HOUSING 9200 4,50M WHITE V1	Not available
	1500602463	COVER HOUSING 9200 5,00M WHITE V1	Not available
	1500602464	COVER HOUSING 9200 5,50M WHITE V1	Not available
	1500602465	COVER HOUSING 9200 6,00M WHITE V1	Not available
	1500602466	COVER HOUSING 9200 4,00M ANO V1	Not available
	1500602467	COVER HOUSING 9200 4,50M ANO V1	Not available
	1500602468	COVER HOUSING 9200 5,00M ANO V1	Not available
	1500602469	COVER HOUSING 9200 5,50M ANO V1	Not available
	1500602470	COVER HOUSING 9200 6,00M ANO V1	Not available
	1500602471	COVER HOUSING 9200 4,00M CREAM V1	Not available
	1500602472	COVER HOUSING 9200 4,50M CREAM V1	Not available
	1500602473	COVER HOUSING 9200 5,00M CREAM V1	Not available
	1500602474	COVER HOUSING 9200 5,50M CREAM V1	Not available
	1500602475	COVER HOUSING 9200 6,00M CREAM V1	Not available
13V2	1500602817	COVER HOUSING 9200 4,00M WHITE V2	210,30
	1500602818	COVER HOUSING 9200 4,50M WHITE V2	239,00
	1500602819	COVER HOUSING 9200 5,00M WHITE V2	267,70
	1500602820	COVER HOUSING 9200 5,50M WHITE V2	296,90
	1500602821	COVER HOUSING 9200 6,00M WHITE V2	325,60
	1500602822	COVER HOUSING 9200 4,00M ANO V2	210,30
	1500602823	COVER HOUSING 9200 4,50M ANO V2	239,00
	1500602824	COVER HOUSING 9200 5,00M ANO V2	267,70
	1500602825	COVER HOUSING 9200 5,50M ANO V2	296,90
	1500602826	COVER HOUSING 9200 6,00M ANO V2	325,60
	1500602827	COVER HOUSING 9200 4,00M CREAM V2	210,30
	1500602828	COVER HOUSING 9200 4,50M CREAM V2	239,00
	1500602829	COVER HOUSING 9200 5,00M CREAM V2	267,70
	1500602830	COVER HOUSING 9200 5,50M CREAM V2	296,90
	1500602831	COVER HOUSING 9200 6,00M CREAM V2	325,60
14	1500602476	LEAD RAIL 9200 4.00M WHITE	260,60
	1500602477	LEAD RAIL 9200 4.50M WHITE	293,20
	1500602478	LEAD RAIL 9200 5.00M WHITE	325,60
	1500602479	LEAD RAIL 9200 5.50M WHITE	358,00
	1500602480	LEAD RAIL 9200 6.00M WHITE	390,80
	1500602481	LEAD RAIL 9200 4.00M ANO	260,60
	1500602482	LEAD RAIL 9200 4.50M ANO	293,20
	1500602483	LEAD RAIL 9200 5.00M ANO	325,60
	1500602484	LEAD RAIL 9200 5.50M ANO	358,00
	1500602485	LEAD RAIL 9200 6.00M ANO	390,80
	1500602486	LEAD RAIL 9200 4.00M CREAM	260,60
	1500602487	LEAD RAIL 9200 4.50M CREAM	293,20
	1500602488	LEAD RAIL 9200 5.00M CREAM	325,60
	1500602489	LEAD RAIL 9200 5.50M CREAM	358,00
	1500602490	LEAD RAIL 9200 6.00M CREAM	390,80
15	1500602491	SPRING & SUPPORT 9200	15,10
16	1500601298	LH & RH GLIDING PIECES TENSION ARMS	25,80
17	1500602698	GEAR ASSY+COUPL.FUNN 9200	55,20
18	1500602492	LH+RH ENDCAP MAINHOUSING 9200 WHITE	23,50
	1500602493	LH+RH ENDCAP MAINHOUSING 9200 ANO	23,50
	1500602494	LH+RH ENDCAP MAINHOUSING 9200 CREAM	44,00
19	1500603373	LH ENDCAP MAINHOUSING 9200 220V WHITE (BEFORE 2022)	31,50
	1500603374	LH ENDCAP MAINHOUSING 9200 220V ANO (BEFORE 2022)	31,50

	1500603375	LH ENDCAP MAINHOUSING 9200 220V CREAM (BEFORE 2022)	52,20
20	1500602495	LH+RH ENDCAP LEADRAIL 9200 WHITE	17,90
	1500602496	LH+RH ENDCAP LEADRAIL 9200 ANO	17,90
	1500602497	LH+RH ENDCAP LEADRAIL 9200 CREAM	17,90
21	1500602498	HOUSING CON.PCE TENSION RAFTER 9200	9,10
22	1500602499	LH+RH ENDCAP ROLLERTUBE 9200	36,50
24	1500602500	L.H. SPRING ARM 9200	275,00
26	1500602501	R.H. SPRING ARM 9200	275,00
27	1500601312	SUPPORT ARM V2 LARGE	88,50
28	1500602502	ANTI RATTLING SUPPORT ARM 6200/9200	9,10
29	1500601789	CENTRAL CLAMP SUPPORT ARM V2	4,40
31	1500603113	POSIT. BLOCK + TENS. RAFTER HOUSING 9200 1+1PC	13,90
32	1500601129	REMOTE CONTROL NICEWAY	Not available
	1500603176	REMOTE CONTROL MINIWAY	94,40
33	1500602749	CABLE 220V MOTOR 9200 5,00M (BEFORE 2022)	77,70
34	1500602759	LH+RH CONN.LEAD RAIL 9200	30,50
	1500602760	LH+RH STOP SPRING ARM 9200	35,30
35	1500603165	SEALING TAPE LEAD RAIL	37,80
36	302685	MOTOR KIT TO 9200 - EM 230V WHITE	See price list
	302686	MOTOR KIT TO 9200 - EM 230V ANO	See price list
	302687	MOTOR KIT TO 9200 - EM 230V RAL9002	See price list
37	1500603674	MOTOR 230V EM 9200 WHI	270,80
	1500603675	MOTOR 230V EM 9200 ANO	270,80
	1500603676	MOTOR 230V EM 9200 CRE	270,80
38	1500603669	LH ENDCAP MH 9200 230V EM WHI	31,50
	1500603670	LH ENDCAP MH 9200 230V EM ANO	31,50
	1500603671	LH ENDCAP MH 9200 230V EM CRE	31,50
39	1500603579	REMOTE CONTROL MOTOR 230V	98,80
40	1500603672	CONTROL BOX 230V EM (REMOTE CONTROL INCL.)	309,90
41	1500603677	PLUG ENDCAP 9200 230V EM (2x)	8,10
42	1500603578	CONTROL SWITCH 230V MOTOR	37,60

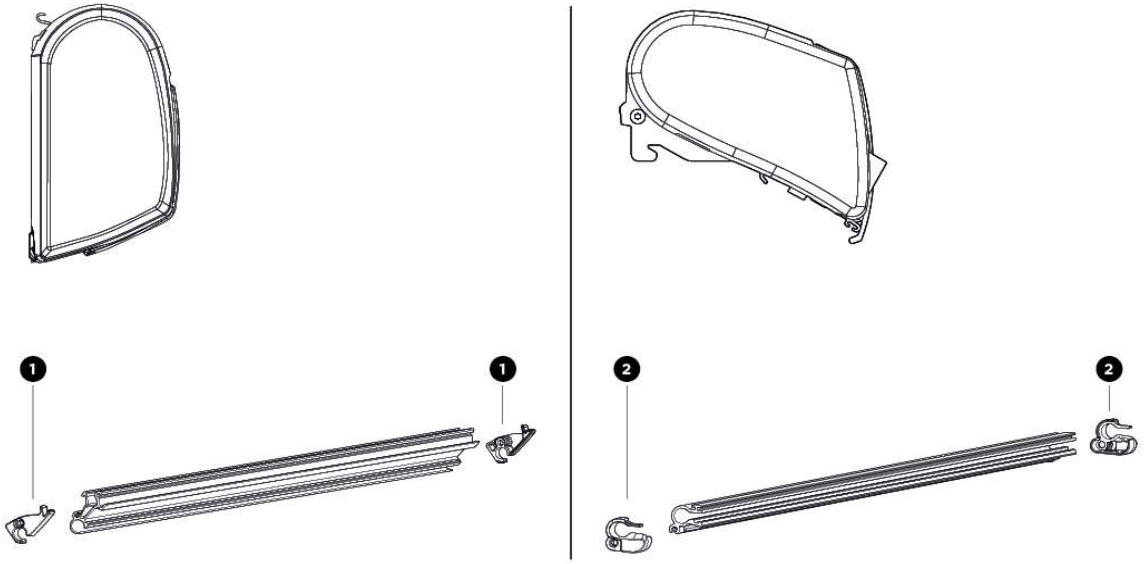

Thule LED Rails (AWA)
OS_02AWA0001-00_Thule-LED-Rails_SP-List
27/12/2022

	ART.NR.	DESCRIPTION	RETAIL € (ex.VAT)
1	1500603768	ENDCAP L+R LED TENT RAIL TO 5200 – WHI	7,60
	1500603769	ENDCAP L+R LED TENT RAIL TO 5200 – ANO	7,60
	1500603770	ENDCAP L+R LED TENT RAIL TO 5200 – ANT	7,60
2	1500603773	ENDCAP L+R LED TENT RAIL TO 6300 – ANT	7,60

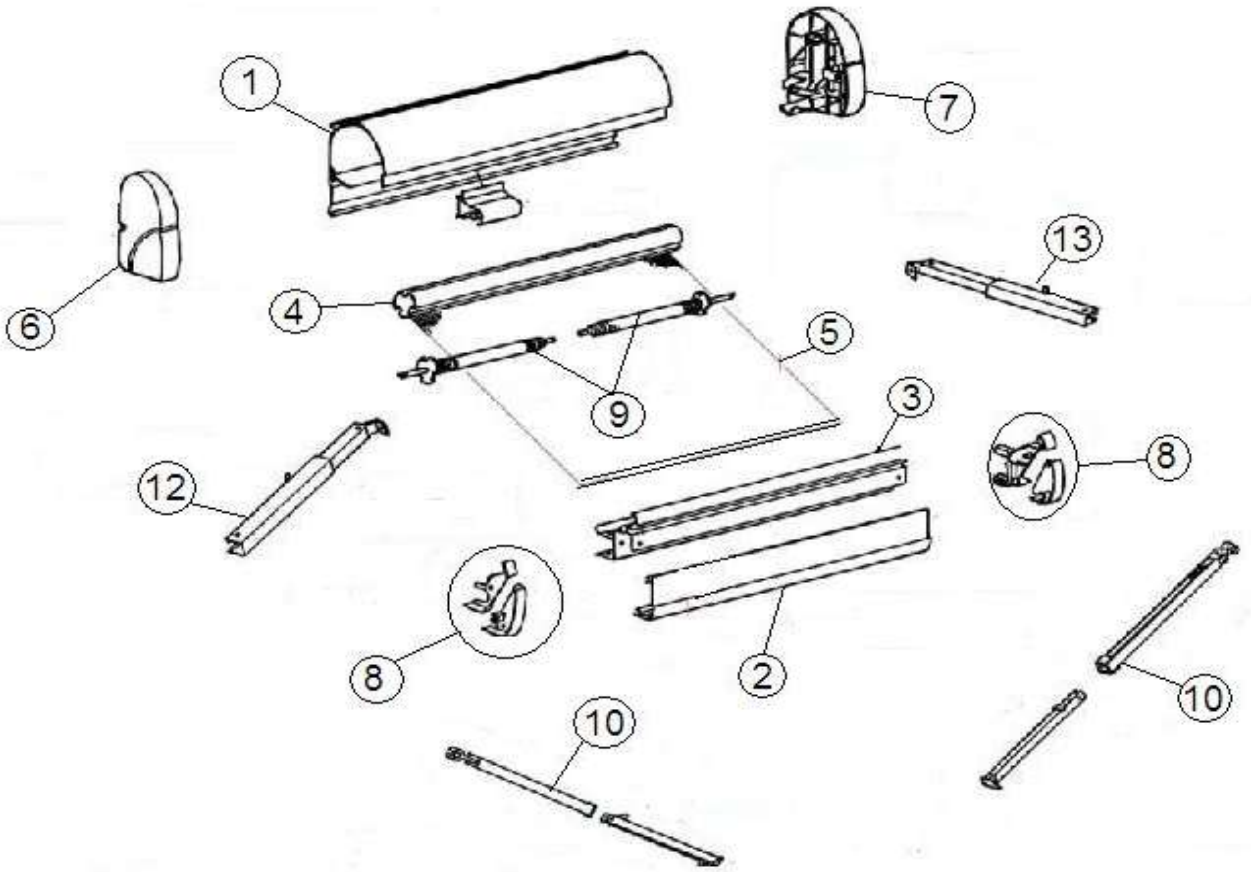

	ART.NR.	DESCRIPTION	RETAIL € (ex.VAT)
1	1500600742	MAIN HOUSING 2000 1.90M	100,40
	1500600743	MAIN HOUSING 2000 2.60M	129,70
	1500600744	MAIN HOUSING 2000 3.00M	149,60
2	1500600745	COVER LEAD RAIL 2000 1.90M	40,90
	1500600746	COVER LEAD RAIL 2000 2.60M	51,90
	1500600747	COVER LEAD RAIL 2000 3.00M	59,30
3	1500600748	INSIDE LEAD RAIL 2000 1.90M	73,30
	1500600749	INSIDE LEAD RAIL 2000 2.60M	94,40
	1500600750	INSIDE LEAD RAIL 2000 3.00M	108,90
4	1500600751	ROLLER TUBE 2000 1.90M	54,70
	1500600752	ROLLER TUBE 2000 2.60M	69,80
	1500600753	ROLLER TUBE 2000 3.00M	80,30
5	1500602325	FABRIC 1.90M 2000 04	Not available
	1500600756	FABRIC 1.90M 2000 18 BA TU	Not available
	1500600758	FABRIC 1.90M 2000 22 RAL 9002	162,40
	1500600759	FABRIC 1.90M 2000 31	162,40
	1500602326	FABRIC 2,60M 2000 04	Not available
	1500600760	FABRIC 2.60M 2000 18 BA TU	Not available
	1500600762	FABRIC 2,60M 2000 22 RAL 9002	254,30
	1500600763	FABRIC 2.60M 2000 31	254,30
	1500602180	FABRIC 3,00M 2000 04	283,00
	1500600765	FABRIC 3.00M 2000 18 BA T	Not available
	1500600767	FABRIC 3.00M 2000 22 RAL 9002	283,00
	1500600768	FABRIC 3.00M 2000 31	283,00
6	1500601196	LH COVER ASSY OMNISTOR 2000	13,90
7	1500601197	RH COVER ASSY OMNISTOR 2000	13,90
8	1500601198	LH+RH END PLATE LEAD RAIL 2000	10,40
9	1500601199	LH+RH TORSION ASSY 2000	62,40
10	1500601588	SUPPORT ARM V2 1.90M	88,50

	1500601960	SUPPORT ARM V2 2.60M XL	88,50
	1500601611	SUPPORT ARM V2 3.00M	80,30
12	1500601323	LH RAFTER ARM ASSY 1.90M 2000	81,60
	1500601324	LH RAFTER ARM ASSY 2.60M 2000	81,60
	1500601325	LH RAFTER ARM ASSY 3.00M 2000	81,60
13	1500601326	RH RAFTER ARM ASSY 2000 1.90M	81,60
	1500601327	RH RAFTER ARM ASSY 2000 2.60M	81,60
	1500601328	RH RAFTER ARM ASSY 2000 3.00M	81,60

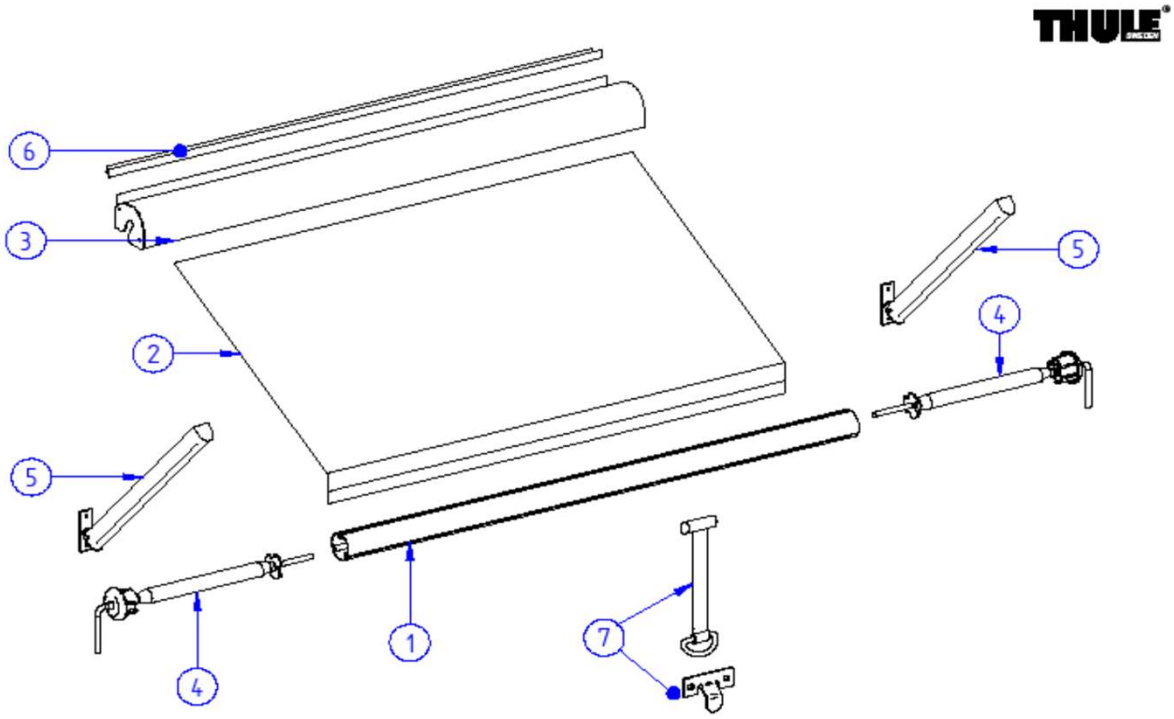

THULE Omnistor W150 WA 606

	ART.NR.	DESCRIPTION	RETAIL € (ex.VAT)
1	1500601804	ROLLER TUBE W150 - 1,00M	Not available
	1500601805	ROLLER TUBE W150 - 1,20M	Not available
	1500601806	ROLLER TUBE W150 - 1,40M	Not available
	1500601454	ROLLER TUBE WA 1.85M	Not available
	1500601807	ROLLER TUBE W150 - 2,85M	Not available
2		FABRIC W150	Not available
3	1500600041	HOUSING & RAIL PROF. W150 1.00M	Not available
	1500601455	HOUSING & RAIL PROF. W150 1.20M	Not available
	1500601822	HOUSING & RAIL PROF. W150 1.40M	Not available
	1500601456	HOUSING & RAIL PROF. W150 1,85M	Not available
	1500601823	HOUSING & RAIL PROF. W150 2,85M	Not available
4	1500601190	LH+RH TORSION ASSY W150	Not available
5	1500601191	LH & RH SUPPORT ARM W150	Not available
6	1500601824	ADAPTER W150 (2PCS)	18,60
7	1500601192	STRAP & STRAP HANGER W150	Not available

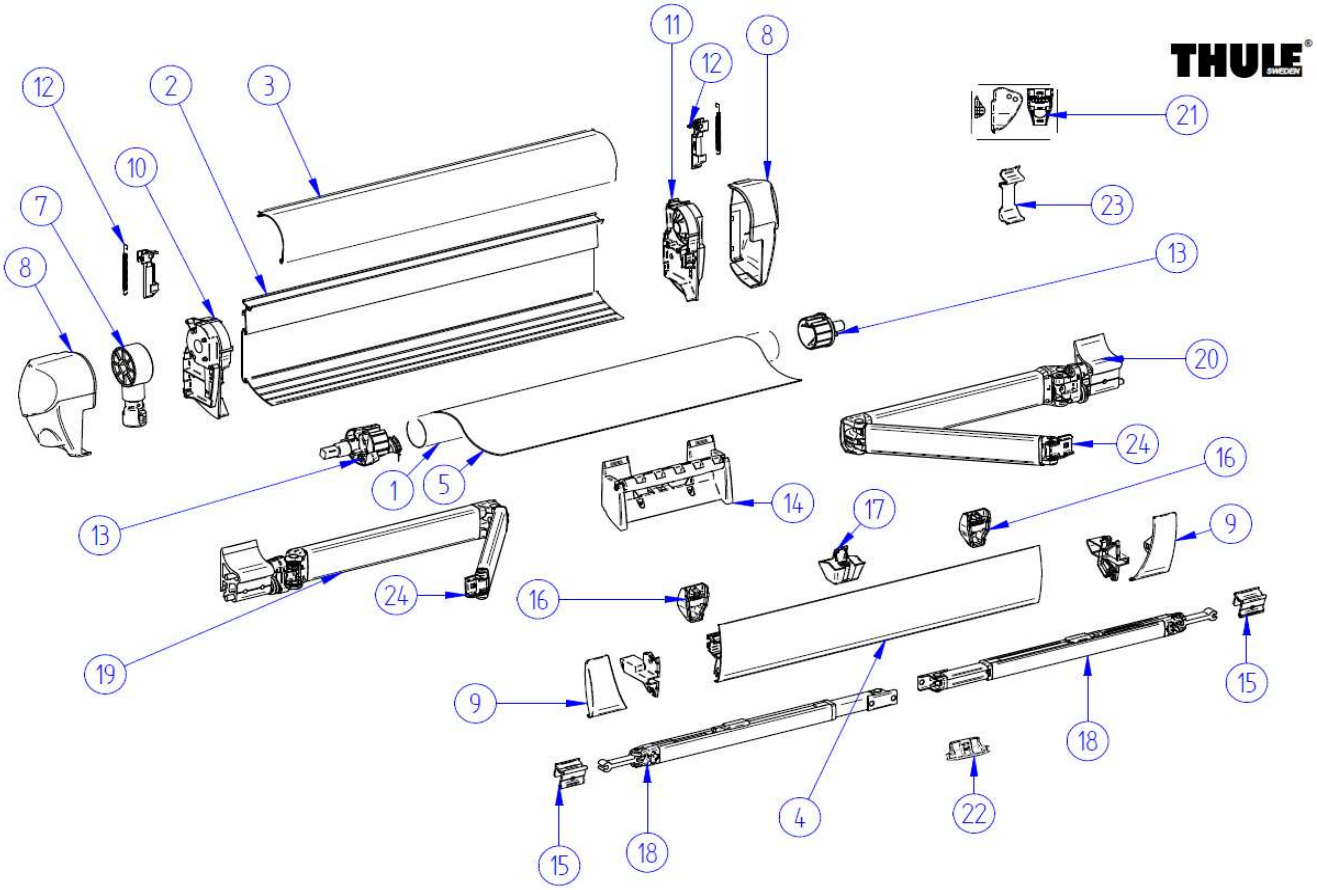

	ART.NR.	DESCRIPTION	RETAIL € (ex.VAT)
1	1500601790	ROLLER TUBE 48 5002/5003 -1.9M	Not available
	1500601791	ROLLER TUBE 48 5002/5003 -2,3M	Not available
	1500601792	ROLLER TUBE 48 5002/5003 -2,6M	Not available
	1500601793	ROLLER TUBE 48 5002/5003 -3,0M	Not available
	1500601794	ROLLER TUBE 48 5002/5003 -3,5M	Not available
	1500601795	ROLLER TUBE 52 5003 -4,00M	Not available
	1500601796	ROLLER TUBE 52 5003 -4,50M	Not available
2	1500601546	MAIN HOUSING 5003 1.90M	94,40
	1500601547	MAIN HOUSING 5003 2.30M	110,60
	1500601548	MAIN HOUSING 5003 2.60M	123,20
	1500601549	MAIN HOUSING 5003 3.00M	142,10
	1500601550	MAIN HOUSING 5003 3.50M	166,00
	1500601551	MAIN HOUSING 5003 4.00M	190,70
	1500601552	MAIN HOUSING 5003 4.50M	192,60
	1500601567	MAIN HOUSING 5003 ANO 1.90M	Not available
	1500601568	MAIN HOUSING 5003 ANO 2.30M	Not available
	1500601569	MAIN HOUSING 5003 ANO 2.60M	Not available
	1500601570	MAIN HOUSING 5003 ANO 3.00M	Not available
	1500601571	MAIN HOUSING 5003 ANO 3.50M	Not available
	1500601572	MAIN HOUSING 5003 ANO 4.00M	Not available
	1500601573	MAIN HOUSING 5003 ANO 4.50M	Not available
	1500602683	MAIN HOUSING 5003 ANTHR. 2.60M	124,10
	1500602684	MAIN HOUSING 5003 ANTHR. 3.00M	143,50
	1500602685	MAIN HOUSING 5003 ANTHR. 3.50M	167,70
	1500602686	MAIN HOUSING 5003 ANTHR. 4.00M	192,60
3	1500601553	ROOF HOUSING 5003 1.90M	47,90
	1500601554	ROOF HOUSING 5003 2.30M	58,20
	1500601555	ROOF HOUSING 5003 2.60M	64,30
	1500601556	ROOF HOUSING 5003 3.00M	74,30

	1500601557	ROOF HOUSING 5003 3.50M	87,10
	1500601558	ROOF HOUSING 5003 4.00M	100,20
	1500601559	ROOF HOUSING 5003 4.50M	112,80
	1500601574	ROOF HOUSING 5003 ANO 1.90M	50,10
	1500601575	ROOF HOUSING 5003 ANO 2.30M	59,30
	1500601576	ROOF HOUSING 5003 ANO 2.60M	65,80
	1500601577	ROOF HOUSING 5003 ANO 3.00M	75,90
	1500601578	ROOF HOUSING 5003 ANO 3.50M	88,70
	1500601579	ROOF HOUSING 5003 ANO 4.00M	102,10
	1500601580	ROOF HOUSING 5003 ANO 4.50M	115,20
	1500602687	ROOF HOUSING 5003 ANTHR. 2.60M	Not available
	1500602688	ROOF HOUSING 5003 ANTHR. 3.00M	Not available
	1500602689	ROOF HOUSING 5003 ANTHR. 3.50M	Not available
	1500602690	ROOF HOUSING 5003 ANTHR. 4.00M	Not available
4	1500601560	LEAD RAIL 5003 1.90M	Not available
	1500601561	LEAD RAIL 5003 2.30M	Not available
	1500601562	LEAD RAIL 5003 2.60M	Not available
	1500601563	LEAD RAIL 5003 3.00M	111,60
	1500601564	LEAD RAIL 5003 3.50M	130,70
	1500601565	LEAD RAIL 5003 4.00M	175,50
	1500601566	LEAD RAIL 5003 4.50M	194,10
	1500601581	LEAD RAIL 5003 ANO 1.90M	Not available
	1500601582	LEAD RAIL 5003 ANO 2.30M	Not available
	1500601583	LEAD RAIL 5003 ANO 2.60M	Not available
	1500601584	LEAD RAIL 5003 ANO 3.00M	Not available
	1500601585	LEAD RAIL 5003 ANO 3.50M	132,90
	1500601586	LEAD RAIL 5003 ANO 4.00M	178,80
	1500601587	LEAD RAIL 5003 ANO 4.50M	201,80
	1500602691	LEAD RAIL 5003 ANTHR. 2.60M	Not available
	1500602692	LEAD RAIL 5003 ANTHR. 3.00M	Not available
	1500602693	LEAD RAIL 5003 ANTHR. 3.50M	Not available
	1500602694	LEAD RAIL 5003 ANTHR. 4.00M	Not available
5	1500601622	FABRIC 1.90M 5003 22 RAL 9002	162,40
	1500601624	FABRIC 1.90M 5003 31 MY GR	162,40
	1500601625	FABRIC 1.90M 5003 32 SA BL	162,40
	1500601631	FABRIC 2.30M 5003 22 RAL 9002	225,90
	1500601633	FABRIC 2.30M 5003 31 MY GR	225,90
	1500601634	FABRIC 2.30M 5003 32 SA BL	225,90
	1500601640	FABRIC 2.60M 5003 22 RAL9002	254,30
	1500601642	FABRIC 2.60M 5003 31 MY GR	254,30
	1500601643	FABRIC 2.60M 5003 32 SA BL	254,30
	1500601649	FABRIC 3.00M 5003 22 RAL9002	283,00
	1500601651	FABRIC 3.00M 5003 31 MY GR	283,00
	1500601652	FABRIC 3.00M 5003 32 SA BL	283,00
	1500601658	FABRIC 3.50M 5003 22 RAL9002	314,50
	1500601660	FABRIC 3.50M 5003 31 MY GR	314,50
	1500601661	FABRIC 3.50M 5003 32 SA BL	314,50
	1500601667	FABRIC 4.00M 5003 22 RAL 9002	346,20
	1500601669	FABRIC 4.00M 5003 31 MY GR	346,20
	1500601670	FABRID 4.00M 5003 32 SA BL	346,20
	1500601676	FABRIC 4.50M 5003 22 RAL 9002	373,80
	1500601678	FABRIC 4.50M 5003 31 MY GR	373,80
	1500601679	FABRIC 4.50M 5003 32 SA BL	373,80
6	1500601207	HAND CRANK ASSY SHORT	Not available
7	1500601221	GEAR ASSY+COUPL.FUNNEL 5003	55,20
8	1500601589	LH+RH ENDCAP MAINHOUSING 5003	11,60
	1500601590	LH+RH ENDC MAINHOUS 5003 ANO	36,10
	1500602695	LH+RH ENDC MAINHOUS 5003 ANTHR.	36,10
9	1500601591	LH+RH ENDCAP LEADRAIL 5003	10,90
	1500601592	LH+RH ENDCAP LEADRAIL 5003 ANO	31,20
	1500602696	LH+RH ENDCAP LEADRAIL 5003 ANTHR.	31,20
10	1500601594	LH ENDPLATE ASSY 5003	15,70

11	1500601595	RH ENDPLATE ASSY 5003	15,70
12	1500601237	LH+RH LOCK ASSY 5003	10,60
13	1500601597	LH+RH ENDCAP ROLLER TUBE D52 (4,00-4,50M)	19,20
	1500601267	LH+RH ENDCAP ROLLER TUBE D48 (<3,50M)	Not available
14	1500601598	SUPPORT ROLLER TUBE 5003	17,90
15	1500601602	LH+RH CONN SUPPORT ARM 5003	5,10
16	1500601606	INSERT LEAD RAIL 5003 2PC	4,80
17	1500601607	GLIDING ANGLE LEAD RAIL	Not available
18	1500601588	SUPPORT ARM V2 1.90M	88,50
	1500601609	SUPPORT ARM V2 2.30M	88,50
	1500601960	SUPPORT ARM V2 2.60M XL	88,50
	1500601611	SUPPORT ARM V2 3.00M	80,30
	1500601612	SUPPORT ARM V2 3.50-4.50M	80,30
19	1500602074	L.H. SPRING ARM COMPL. 5003 - 1,90M	167,50
	1500602076	L.H. SPRING ARM COMPL. 5003 - 2,30M	Not available
	1500602078	L.H. SPRING ARM COMPL. 5003 - 2,60M	181,30
	1500602080	L.H. SPRING ARM COMPL. 5003 ≥3,00M	Not available
20	1500602075	R.H. SPRING ARM COMPL. 5003 - 1,90M	167,50
	1500602077	R.H. SPRING ARM COMPL. 5003 - 2,30M	178,10
	1500602079	R.H. SPRING ARM COMPL. 5003 - 2,60M	181,30
	1500602081	R.H. SPRING ARM COMPL. 5003 ≥3,00M	188,90
21	1500601608	CONNECTION PCS TENS RAFT 5003	8,10
22	1500601789	CENTRAL CLAMP SUPPORT ARM V2	4,40
23	1500602327	POSITIONER SPRING ARM - 2PC	9,10
24	1500601601	LH+RH CONN LEAD RAIL 5003	17,90
	1500602756	LH+RH STOP SPRING ARM 5003	32,80

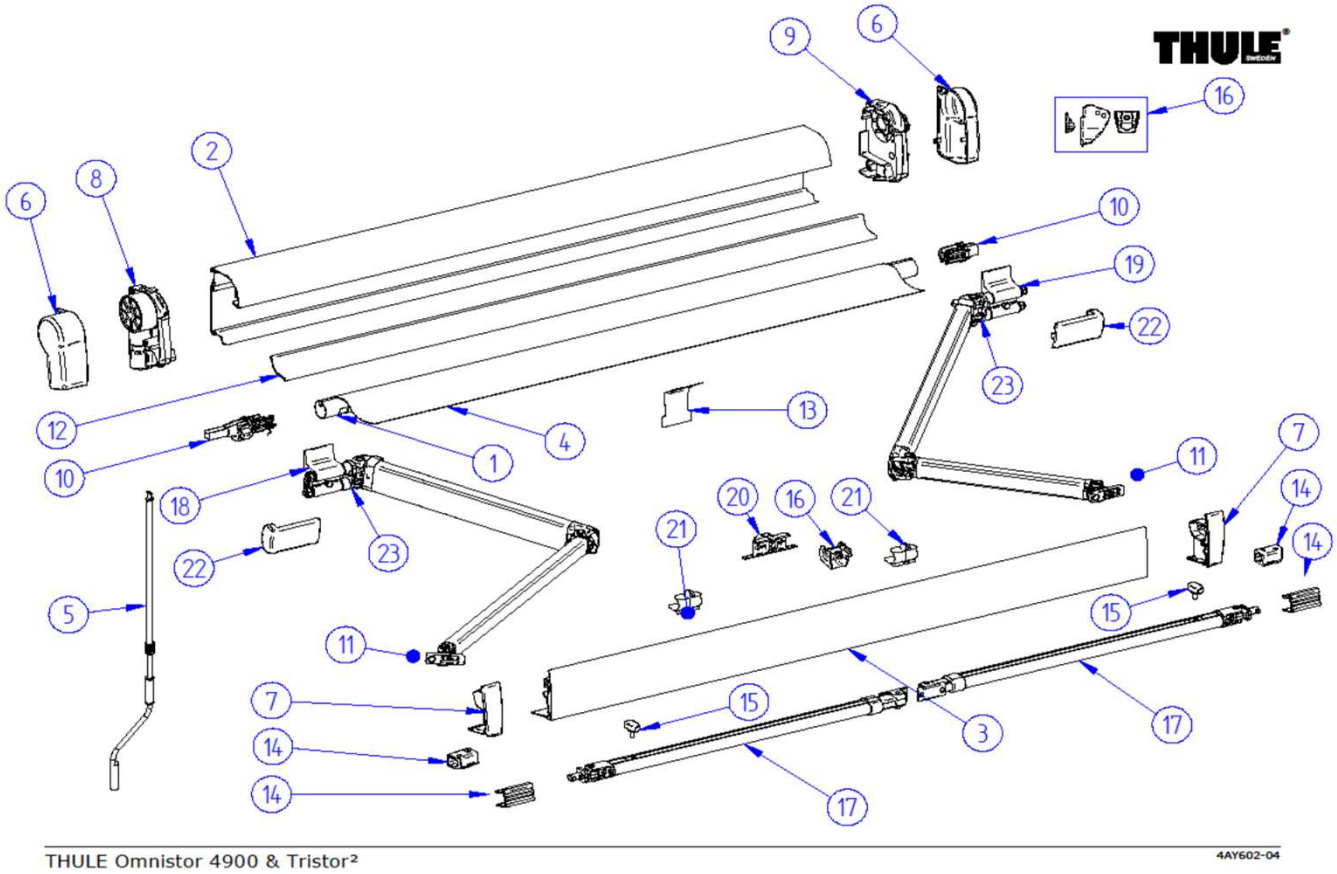

	ART.NR.	DESCRIPTION	RETAIL € (ex.VAT)
1	1500602658	ROLLER TUBE D=30X0.8MM / 4200-2,60M	60,00
	1500602186	ROLLER TUBE D=30X0.8MM / 4200-3.00M	66,60
	1500602187	ROLLER TUBE D=30X0.8MM / 4200-3.50M	75,50
	1500602188	ROLLER TUBE D=30X0.8MM / 4200-4.00M	84,70
	1500602189	ROLLER TUBE D=30X0.8MM / 4200-4.50M	93,90
2	1500602659	MAINHOUSING 4900 2M60 WHITE	Not available
	1500602190	MAINHOUSING 4900 3M00 WHITE	Not available
	1500602191	MAINHOUSING 4900 3M50 WHITE	Not available
	1500602192	MAINHOUSING 4900 4M00 WHITE	Not available
	1500602193	MAINHOUSING 4900 4M50 WHITE	Not available
	1500602660	MAINHOUSING 4900 2M60 ANO	166,70
	1500602198	MAINHOUSING 4900 3M00 ANO	182,60
	1500602199	MAINHOUSING 4900 3M50 ANO	203,50
	1500602200	MAINHOUSING 4900 4M00 ANO	242,50
	1500602201	MAINHOUSING 4900 4M50 ANO	Not available
	1500602948	MAINHOUSING 4900 2M60 ANTHR.	166,70
	1500602949	MAINHOUSING 4900 3M00 ANTHR.	182,60
3	1500602661	LEADRAIL 4200/4900 2M60 WHI	119,30
	1500602194	LEADRAIL 4200/4900 3M00 WHI	131,90
	1500602195	LEADRAIL 4200/4900 3M50 WHI	151,70
	1500602196	LEADRAIL 4200/4900 4M00 WHI	172,80
	1500602197	LEADRAIL 4200/4900 4M50 WHI	175,20
	1500602662	LEADRAIL 4200/4900 2M60 ANO	119,30
	1500602248	LEADRAIL 4200/4900 3M00 ANO	131,90
	1500602249	LEADRAIL 4200/4900 3M50 ANO	151,70
	1500602250	LEADRAIL 4200/4900 4M00 ANO	172,80
	1500602251	LEADRAIL 4200/4900 4M50 ANO	175,20
	1500602950	LEADRAIL 4200/4900 2M60 ANT	119,30
	1500602951	LEADRAIL 4200/4900 3M00 ANT	131,90

4	1500602663	FABRIC 2M60 4900 31	254,30
	1500602664	FABRIC 2M60 4900 32	254,30
	1500602202	FABRIC 3M00 4900 31	283,00
	1500602203	FABRIC 3M00 4900 32	283,00
	1500602204	FABRIC 3M50 4900 31	314,50
	1500602205	FABRIC 3M50 4900 32	314,50
	1500602206	FABRIC 4M00 4900 31	346,20
	1500602207	FABRIC 4M00 4900 32	346,20
	1500602208	FABRIC 4M50 4900 31	373,80
	1500602209	FABRIC 4M50 4900 32	373,80
5	1500602210	HAND CRANK SMALL G2	50,90
6	1500602211	LH+RH ENDCAP MAINHOUSING 4900	17,40
	1500602212	LH+RH ENDCAP MAINHOUSING 4900 ANO	17,40
	1500602952	LH+RH ENDCAP MAINHOUSING 4900 ANTHR.	17,40
7	1500602213	LH+RH ENDCAP LEADRAIL 4900	14,40
	1500602214	LH+RH ENDCAP LEADRAIL 4900 ANO	14,40
	1500602953	LH+RH ENDCAP LEADRAIL 4900 ANTHR.	14,40
8	1500602215	LH ENDPLATE ASSY 4900	69,80
	1500602216	LH ENDPLATE ASSY 4900 ANO	69,80
	1500602954	LH ENDPLATE ASSY 4900 ANTHR.	69,80
9	1500602217	RH ENDPLATE ASSY 4900	17,40
	1500602218	RH ENDPLATE ASSY 4900 ANO	17,40
	1500602955	RH ENDPLATE ASSY 4900 ANTHR.	17,40
10	1500602219	LH+RH ENDCAP ROLLERTUBE 4900	14,20
11	1500602374	LH+RH CONN LEAD RAIL 4900	17,90
	1500602753	LH+RH STOP SPRING ARM 4900	32,80
12	1500602665	SUPPORT ROLLER TUBE 4900 2M60	21,20
	1500602284	SUPPORT ROLLER TUBE 4900 3M00	22,30
	1500602285	SUPPORT ROLLER TUBE 4900 3M50	24,40
	1500602221	SUPPORT ROLLER TUBE 4900 4M00	27,20
	1500602222	SUPPORT ROLLER TUBE 4900 4M50	29,30
13	1500602223	SPRING SUPPORT ROLLER TUBE 4900	8,60
14	1500602224	CONNECTION SUPPORT ARM 4900	21,40
15	1500602225	KNOB SUPPORT ARM OVAL (2PCS)	10,60
16	1500602226	CONNECTION PCS TENSION RAFTER 4900	7,90
17	1500602666	SUPPORT LEG OVAL 2M60	55,40
	1500602227	SUPPORT LEG OVAL 3M00	60,00
	1500602228	SUPPORT LEG OVAL 3M50-4M50	70,10
18	1500602667	L.H. SPRING ARM 4900 ANO 2M60	152,20
	1500602229	L.H. SPRING ARM 4900 ANO 3,0/3,5M	158,80
	1500602230	L.H. SPRING ARM 4900 ANO 4,0/4,5M	158,80
19	1500602668	R.H. SPRING ARM 4900 ANO 2M60	152,20
	1500602231	R.H. SPRING ARM 4900 ANO 3,0/3,5M	158,80
	1500602232	R.H. SPRING ARM 4900 ANO 4,0/4,5M	158,80
20	1500602233	CENTRAL CLAMP SUPPORT ARM OVAL	5,10
21	1500602234	CLIP SUPPORT ARM OVAL	5,10
22	1500602235	LH+RH COVER SPRING ARM BR.	7,90
23	1500602811	ROTATION PLATE 4900 / 6200	25,50

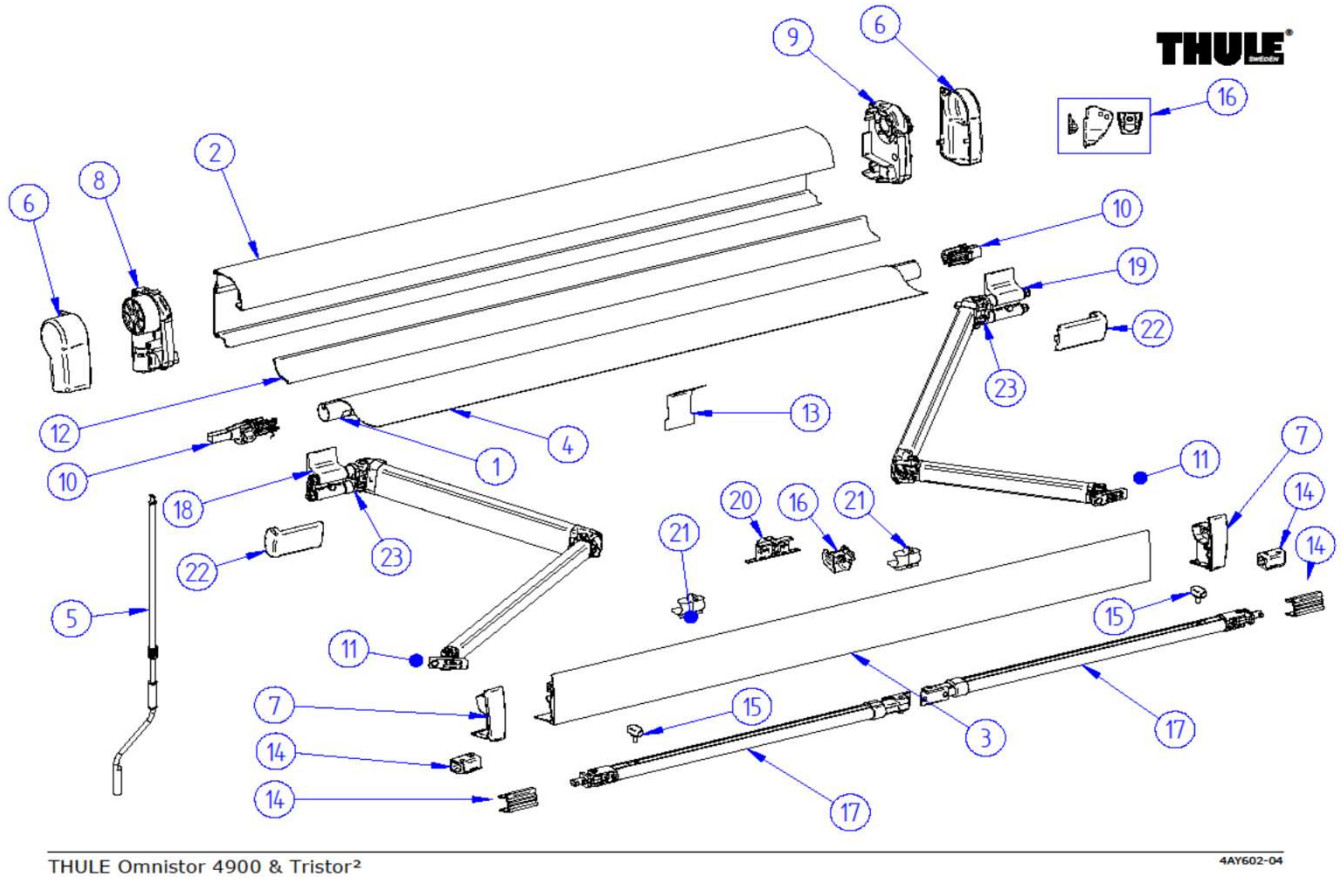

	ART.NR.	DESCRIPTION	RETAIL € (ex.VAT)
1	1500602186	ROLLER TUBE D=30X0.8MM / TRISTOR² -3.00M	66,60
	1500602187	ROLLER TUBE D=30X0.8MM / TRISTOR² -3.50M	75,50
	1500602188	ROLLER TUBE D=30X0.8MM / TRISTOR² -4.00M	84,70
	1500602189	ROLLER TUBE D=30X0.8MM / TRISTOR² -4.50M	93,90
2	1500602190	MAINHOUSING TRISTOR² 3M00 WHITE	Not available
	1500602191	MAINHOUSING TRISTOR² 3M50 WHITE	Not available
	1500602192	MAINHOUSING TRISTOR² 4M00 WHITE	Not available
	1500602193	MAINHOUSING TRISTOR² 4M50 WHITE	Not available
	1500602198	MAINHOUSING TRISTOR² 3M00 ANO	182,60
	1500602199	MAINHOUSING TRISTOR² 3M50 ANO	203,50
	1500602200	MAINHOUSING TRISTOR² 4M00 ANO	242,50
	1500602201	MAINHOUSING TRISTOR² 4M50 ANO	Not available
3	1500602194	LEADRAIL TRISTOR² 3M00 WHITE	131,90
	1500602195	LEADRAIL TRISTOR² 3M50 WHITE	151,70
	1500602196	LEADRAIL TRISTOR² 4M00 WHITE	172,80
	1500602197	LEADRAIL TRISTOR² 4M50 WHITE	175,20
	1500602248	LEADRAIL TRISTOR² 3M00 ANO	131,90
	1500602249	LEADRAIL TRISTOR²3M50 ANO	151,70
	1500602250	LEADRAIL TRISTOR² 4M00 ANO	172,80
	1500602251	LEADRAIL TRISTOR² 4M50 ANO	175,20
4	1500602202	FABRIC 3M00 4900 31	283,00
	1500602204	FABRIC 3M50 4900 31	314,50
	1500602206	FABRIC 4M00 4900 31	346,20
	1500602208	FABRIC 4M50 4900 31	373,80
5	1500602210	HAND CRANK SMALL G2	50,90
6	1500602211	LH+RH ENDCAP MAINHOUSING TRISTOR² WHITE	17,40
	1500602212	LH+RH ENDCAP MAINHOUSING TRISTOR² ANO	17,40
7	1500602213	LH+RH ENDCAP LEADRAIL TRISTOR² WHITE	14,40
	1500602214	LH+RH ENDCAP LEADRAIL TRISTOR² ANO	14,40

8	1500602215	LH ENDPLATE ASSY TRISTOR² WHITE	69,80
	1500602216	LH ENDPLATE ASSY TRISTOR² ANO	69,80
9	1500602217	RH ENDPLATE ASSY TRISTOR² WHITE	17,40
	1500602218	RH ENDPLATE ASSY TRISTOR² ANO	17,40
10	1500602219	LH+RH ENDCAP ROLLERTUBE TRISTOR²	14,20
11	1500602374	LH+RH CONN LEAD RAIL TRISTOR²	17,90
	1500602753	LH+RH STOP SPRING ARM TRISTOR²	32,80
12	1500602284	SUPPORT ROLLER TUBE TRISTOR² 3M00	22,30
	1500602285	SUPPORT ROLLER TUBE TRISTOR² 3M50	24,40
	1500602221	SUPPORT ROLLER TUBE TRISTOR² 4M00	27,20
	1500602222	SUPPORT ROLLER TUBE TRISTOR² 4M50	29,30
13	1500602223	SPRING SUPPORT ROLLER TUBE TRISTOR²	8,60
14	1500602224	CONNECTION SUPPORT ARM TRISTOR²	21,40
15	1500602225	KNOB SUPPORT ARM OVAL (2PCS)	10,60
16	1500602226	CONNECTION PCS TENSION RAFTER TRISTOR²	7,90
17	1500602227	SUPPORT LEG OVAL 3M00	60,00
	1500602228	SUPPORT LEG OVAL 3M50-4M50	70,10
18	1500602244	L.H. SPRING ARM TRISTOR² 3,0/3,5M	158,80
	1500602245	L.H. SPRING ARM TRISTOR² 4,0/4,5M	158,80
19	1500602246	R.H. SPRING ARM TRISTOR² 3,0/3,5M	158,80
	1500602247	R.H. SPRING ARM TRISTOR² 4,0/4,5M	158,80
20	1500602233	CENTRAL CLAMP SUPPORT ARM OVAL	5,10
21	1500602234	CLIP SUPPORT ARM OVAL TRISTOR²	5,10
22	1500602235	LH+RH COVER SPRING ARM BR. TRISTOR²	7,90
23	1500602811	ROTATION PLATE 4900 / 6200	25,50

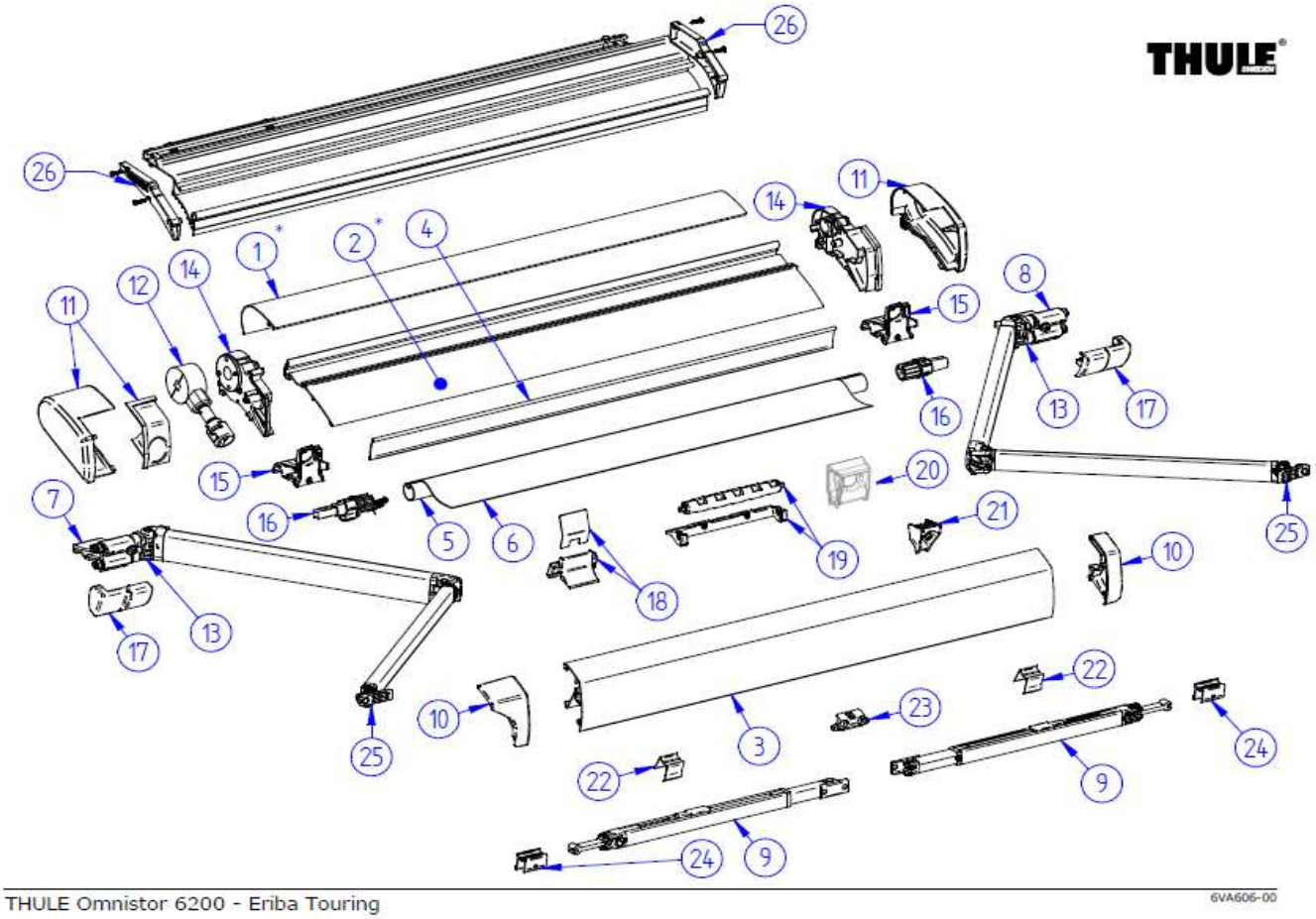

	ART.NR.	DESCRIPTION	RETAIL € (ex.VAT)
1	1500603158	COVER HOUSING 6200 2,80M WHITE V2	142,10
	1500602834	COVER HOUSING 6200 3,25M WHITE V2	165,30
2	1500603159	BACK HOUSING 6200 2,80M V2	Not available
	1500602853	BACK HOUSING 6200 3,25M V2	Not available
3	1500603160	LEAD RAIL 6200 2,80M WHITE	173,50
	1500602531	LEAD RAIL 6200 3,25M WHITE	202,80
4	1500603161	SUPPORT ROLLER TUBE 6200 2,80M	Not available
	1500602549	SUPPORT ROLLER TUBE 6200 3,25M	Not available
5	1500603162	ROLLER TUBE D=30 / 6200 2,80M	66,60
	1500602556	ROLLER TUBE D=30 / 6200 3,25M	75,50
6	1500603163	FABRIC 2,80M 6200 31	Not available
	1500602574	FABRIC 3,25M 6200 31	314,50
7	1500602596	L.H. SPRING ARM 6200 2,60/2,80M	181,30
	1500602597	L.H. SPRING ARM 6200 3,0/4,5M	188,90
8	1500602598	R.H. SPRING ARM 6200 2,60M/2,80M	181,30
	1500602599	R.H. SPRING ARM 6200 3,0/4,5M	188,90
9	1500601960	SUPPORT ARM V2 2.60M XL	88,50
	1500601611	SUPPORT ARM V2 3.00-3,25M	80,30
10	1500602600	LH+RH ENDCAP LEADRAIL 6200 WHITE	15,10
11	1500602603	LH+RH ENDCAP MAINHOUSING 6200 WHITE	20,90
12	1500602606	GEAR ASSY+COUPL.FUNN 6200	55,20
13	1500602811	ROTATION PLATE 4900 / 6200	25,50
14	1500602607	LH+RH ENDPLATE ASSY 6200 WHITE	29,50
15	1500602610	HOUSING CON.PCE TENSION RAFTER 6200	9,10
16	1500602611	LH+RH ENDCAP ROLLER TUBE 6200	14,40
17	1500602612	LH+RH COVER SUPPORT SPRING ARM 6200	11,10
18	1500602613	SPRING & SUPPORT 6200	11,90
19	1500602614	CENTER SUPPORT ROLLER TUBE 6200	29,50
20	1500603112	POSIT. BLOCK + TENS. RAFTER HOUSING 6200 1+1PC	10,90

21	1500602616	INSERT LEAD RAIL 6200 2PC	9,10
22	1500602502	ANTI RATTLING SUPPORT ARM 6200/9200	9,10
23	1500601789	CENTRAL CLAMP SUPPORT ARM V2	4,40
24	1500601602	LH & RH CONNECTION SUPPORT ARM	5,10
25	1500602374	LH+RH CONN.LEAD RAIL 6200	17,90
	1500602753	LH+RH STOP SPRING ARM 6200	32,80
26	1500603164	END CAPS ROOF ADAPTER ERIBA L&R	15,10

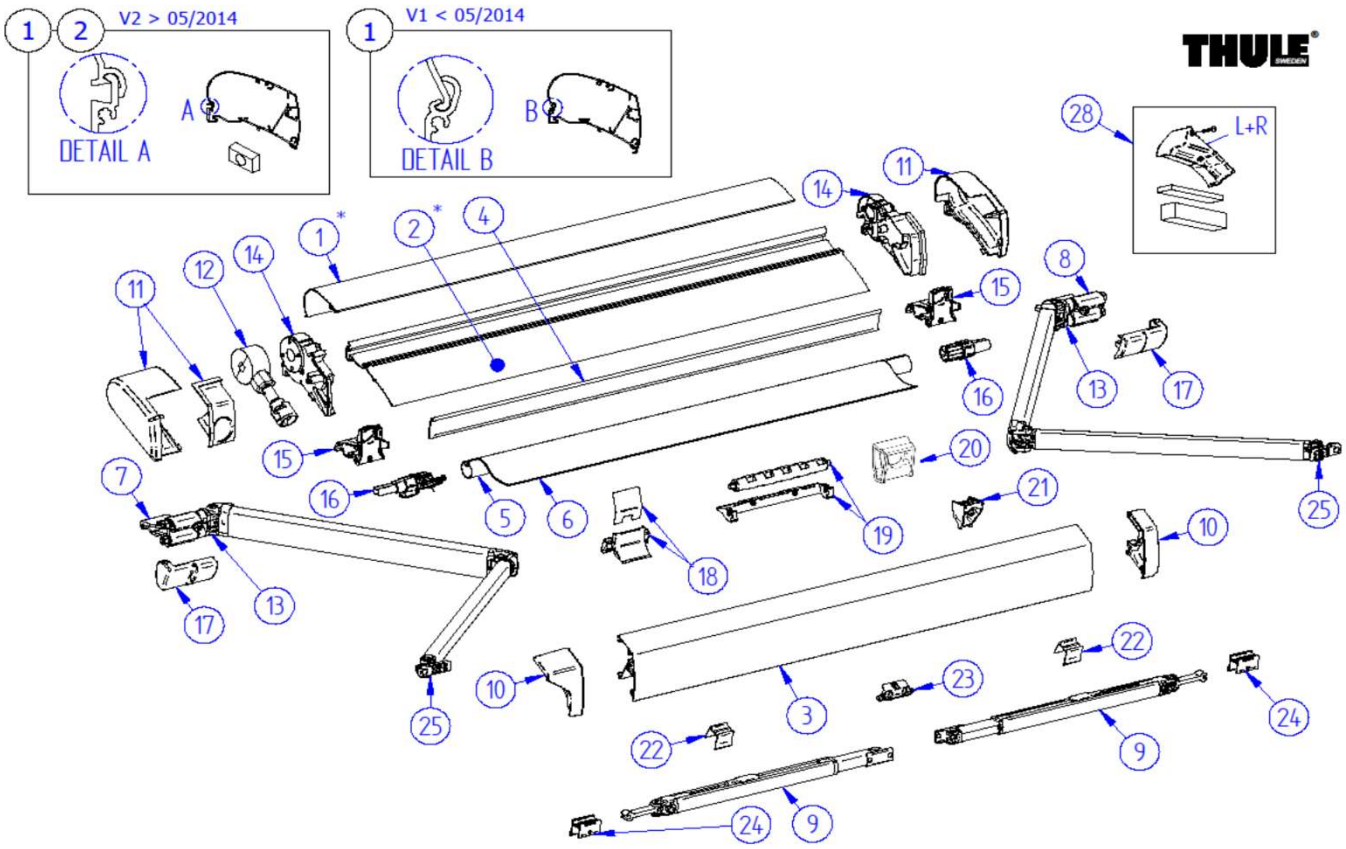

	ART.NR.	DESCRIPTION	RETAIL € (ex.VAT)
1-V2	1500602832	COVER HOUSING 6200 2,60M WHITE V2	123,20
	1500602833	COVER HOUSING 6200 3,00M WHITE V2	142,10
	1500602834	COVER HOUSING 6200 3,25M WHITE V2	165,30
	1500602835	COVER HOUSING 6200 3,50M WHITE V2	165,30
	1500602836	COVER HOUSING 6200 3,75M WHITE V2	190,50
	1500602837	COVER HOUSING 6200 4,00M WHITE V2	190,50
	1500602838	COVER HOUSING 6200 4,25M WHITE V2	Not available
	1500602839	COVER HOUSING 6200 4,50M WHITE V2	Not available
	1500602865	COVER HOUSING 6200 5,00M WHITE V2	Not available
	1500602862	COVER HOUSING 6200 2,60M ANO V2	123,20
	1500602863	COVER HOUSING 6200 3,00M ANO V2	142,10
	1500602840	COVER HOUSING 6200 3,25M ANO V2	165,30
	1500602841	COVER HOUSING 6200 3,50M ANO V2	165,30
	1500602842	COVER HOUSING 6200 3,75M ANO V2	190,50
	1500602843	COVER HOUSING 6200 4,00M ANO V2	190,50
	1500602844	COVER HOUSING 6200 4,50M ANO V2	222,90
	1500602845	COVER HOUSING 6200 2,60M ANTHR. V2	165,30
	1500602846	COVER HOUSING 6200 3,00M ANTHR. V2	165,30
	1500602847	COVER HOUSING 6200 3,25M ANTHR. V2	190,50
	1500602848	COVER HOUSING 6200 3,50M ANTHR. V2	190,50
	1500602849	COVER HOUSING 6200 3,75M ANTHR. V2	222,90
	1500602850	COVER HOUSING 6200 4,00M ANTHR. V2	222,90
2	1500602851	BACK HOUSING 6200 2,60M V2	Not available
	1500602852	BACK HOUSING 6200 3,00M V2	Not available
	1500602853	BACK HOUSING 6200 3,25M V2	Not available
	1500602854	BACK HOUSING 6200 3,50M V2	Not available
	1500602855	BACK HOUSING 6200 3,75M V2	Not available
	1500602856	BACK HOUSING 6200 4,00M V2	Not available
	1500602857	BACK HOUSING 6200 4,25M V2	Not available

	1500602858	BACK HOUSING 6200 4,50M V2	Not available
	1500602866	BACK HOUSING 6200 5,00M V2	Not available
3	1500602529	LEAD RAIL 6200 2,60M WHITE	150,50
	1500602530	LEAD RAIL 6200 3,00M WHITE	173,50
	1500602531	LEAD RAIL 6200 3,25M WHITE	202,80
	1500602532	LEAD RAIL 6200 3,50M WHITE	202,80
	1500602533	LEAD RAIL 6200 3,75M WHITE	234,00
	1500602534	LEAD RAIL 6200 4,00M WHITE	234,00
	1500602859	LEAD RAIL 6200 4,25M WHITE	255,10
	1500602535	LEAD RAIL 6200 4,50M WHITE	255,10
	1500602867	LEAD RAIL 6200 5,00M WHITE	Not available
	1500602538	LEAD RAIL 6200 3,25M ANO	202,80
	1500602539	LEAD RAIL 6200 3,50M ANO	202,80
	1500602540	LEAD RAIL 6200 3,75M ANO	234,00
	1500602541	LEAD RAIL 6200 4,00M ANO	234,00
	1500602542	LEAD RAIL 6200 4,50M ANO	255,10
	1500602860	LEAD RAIL 6200 2,60M ANTHR.	173,50
	1500602861	LEAD RAIL 6200 3,00M ANTHR.	173,50
	1500602543	LEAD RAIL 6200 3,25M ANTHR.	234,00
	1500602544	LEAD RAIL 6200 3,50M ANTHR.	234,00
	1500602545	LEAD RAIL 6200 3,75M ANTHR.	255,10
	1500602546	LEAD RAIL 6200 4,00M ANTHR.	255,10
4	1500603311	ALU SUPPORT ROLLER TUBE 6300 2,60M	52,20
	1500603312	ALU SUPPORT ROLLER TUBE 6300 3,00M	52,20
	1500603313	ALU SUPPORT ROLLER TUBE 6300 3,25M	58,40
	1500603314	ALU SUPPORT ROLLER TUBE 6300 3,50M	60,70
	1500603315	ALU SUPPORT ROLLER TUBE 6300 3,75M	63,30
	1500603316	ALU SUPPORT ROLLER TUBE 6300 4,00M	65,80
	1500603317	ALU SUPPORT ROLLER TUBE 6300 4,25M	68,00
	1500603318	ALU SUPPORT ROLLER TUBE 6300 4,50M	70,30
	1500603319	ALU SUPPORT ROLLER TUBE 6300 5,00M	75,40
5	1500602554	ROLLER TUBE D=30 / 6200 2,60M	58,20
	1500602555	ROLLER TUBE D=30 / 6200 3.00M	66,60
	1500602556	ROLLER TUBE D=30 / 6200 3,25M	75,50
	1500602557	ROLLER TUBE D=30 / 6200 3,50M	75,50
	1500602558	ROLLER TUBE D=30 / 6200 3,75M	84,70
	1500602559	ROLLER TUBE D=30 / 6200 4.00M	84,70
	1500602870	ROLLER TUBE D=30 / 6200 4,25M	93,90
	1500602560	ROLLER TUBE D=30 / 6200 4.50M	93,90
	1500602871	ROLLER TUBE D=30 / 6200 5,00M	103,30
6	1500602563	FABRIC 2,60M 6200 22	254,30
	1500602564	FABRIC 2,60M 6200 31	254,30
	1500602565	FABRIC 2,60M 6200 32	254,30
	1500602568	FABRIC 3,00M 6200 22	283,00
	1500602569	FABRIC 3,00M 6200 31	283,00
	1500602570	FABRIC 3,00M 6200 32	283,00
	1500602573	FABRIC 3,25M 6200 22	314,50
	1500602574	FABRIC 3,25M 6200 31	314,50
	1500602575	FABRIC 3,25M 6200 32	314,50
	1500602578	FABRIC 3,50M 6200 22	314,50
	1500602579	FABRIC 3,50M 6200 31	314,50
	1500602580	FABRIC 3,50M 6200 32	314,50
	1500602583	FABRIC 3,75M 6200 22	346,20
	1500602584	FABRIC 3,75M 6200 31	346,20
	1500602585	FABRIC 3,75M 6200 32	346,20
	1500602588	FABRIC 4,00M 6200 22	346,20
	1500602589	FABRIC 4,00M 6200 31	346,20
	1500602590	FABRIC 4,00M 6200 32	346,20
	1500602874	FABRIC 4,25M 6200 22	373,80
	1500602875	FABRIC 4,25M 6200 31	373,80
	1500602876	FABRIC 4,25M 6200 32	373,80
	1500602593	FABRIC 4,50M 6200 22	373,80

	1500602594	FABRIC 4,50M 6200 31	373,80
	1500602595	FABRIC 4,50M 6200 32	373,80
	1500602877	FABRIC 5,00M 6200 31	400,90
7	1500602596	L.H. SPRING ARM 6200 2,60M	181,30
	1500602597	L.H. SPRING ARM 6200 3,0/4,5M	188,90
8	1500602598	R.H. SPRING ARM 6200 2,60M	181,30
	1500602599	R.H. SPRING ARM 6200 3,0/4,5M	188,90
9	1500601960	SUPPORT ARM V2 2.60M XL	88,50
	1500601611	SUPPORT ARM V2 3.00-3,25M	80,30
	1500601612	SUPPORT ARM V2 3.50-4.50M	80,30
10	1500602600	LH+RH ENDCAP LEADRAIL 6200 WHITE	15,10
	1500602601	LH+RH ENDCAP LEADRAIL 6200 ANO	15,10
	1500602602	LH+RH ENDCAP LEADRAIL 6200 ANTHR.	15,10
11	1500602603	LH+RH ENDCAP MAINHOUSING 6200 WHITE	20,90
	1500602604	LH+RH ENDCAP MAINHOUSING 6200 ANO	20,90
	1500602605	LH+RH ENDCAP MAINHOUSING 6200 ANTHR	20,90
12	1500602606	GEAR ASSY+COUPL.FUNN 6200	55,20
13	1500602811	ROTATION PLATE 4900 / 6200	25,50
14	1500602607	LH+RH ENDPLATE ASSY 6200 WHITE	29,50
	1500602608	LH+RH ENDPLATE ASSY 6200 ANO	29,50
	1500602609	LH+RH ENDPLATE ASSY 6200 ANTHR	29,50
15	1500602610	HOUSING CON.PCE TENSION RAFTER 6200	9,10
16	1500602611	LH+RH ENDCAP ROLLER TUBE 6200	14,40
17	1500602612	LH+RH COVER SUPPORT SPRING ARM 6200	11,10
18	1500602613	SPRING & SUPPORT 6200	11,90
19	1500602614	CENTER SUPPORT ROLLER TUBE 6200	29,50
20	1500603112	POSIT. BLOCK + TENS. RAFTER HOUSING 6200 1+1PC	10,90
21	1500602616	INSERT LEAD RAIL 6200 2PC	9,10
22	1500602502	ANTI RATTLING SUPPORT ARM 6200/9200	9,10
23	1500601789	CENTRAL CLAMP SUPPORT ARM V2	4,40
24	1500601602	LH & RH CONNECTION SUPPORT ARM	5,10
25	1500602374	LH+RH CONN.LEAD RAIL 6200	17,90
	1500602753	LH+RH STOP SPRING ARM 6200	32,80
26	1500602719	ADDITIONAL ROOF ADAPTER MOUNTING RAIL	56,60
	1500602720	ADDITIONAL ROOF ADAPTER FENDT BRILJANT	70,50
	1500602721	ADDITIONAL ROOF ADAPTER DUCATO >2007	Not available
	1500602722	ADDITIONAL ROOF ADAPTER MASTER >2011	56,60
	1500602723	ADDITIONAL ROOF ADAPTER SPRINTER	56,60
27	1500603165	SEALING TAPE LEAD RAIL	37,80
28	1500603178	END CAPS COVERS DUCATO	11,30
29	1500603354	EPDM SEALING PROFILE 18MM (2x2,00M)	44,00

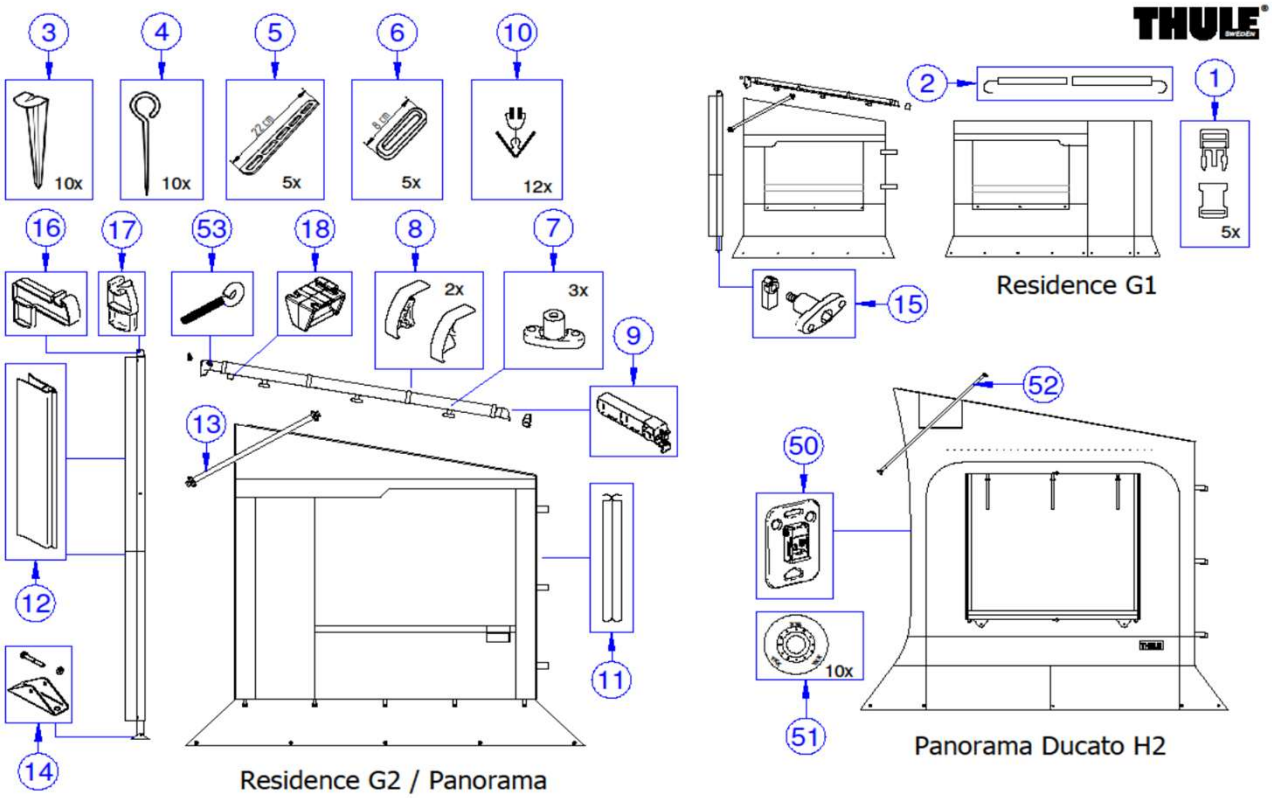

THULE Residence / Panorama / Veduta SRS600-04

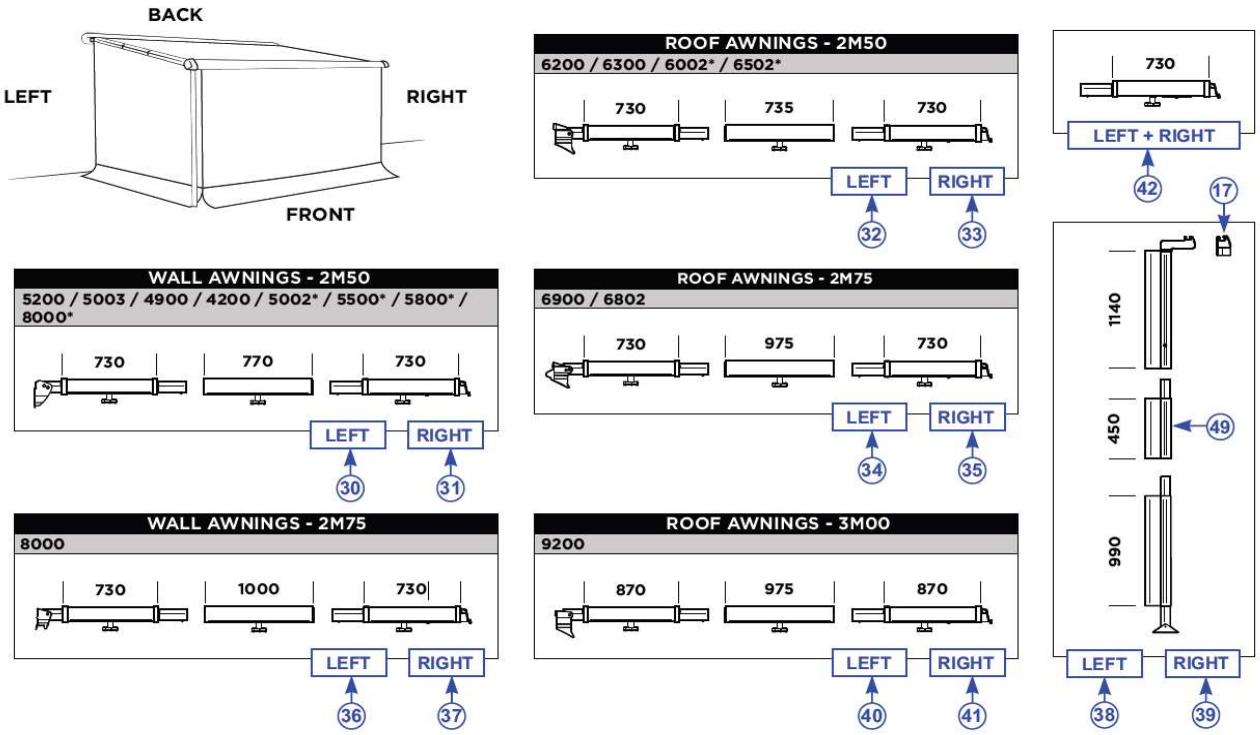

*** Connection pieces not included. See sparepartdrawing SRS601.**

THULE Residence / Panorama / Veduta SRS602-03

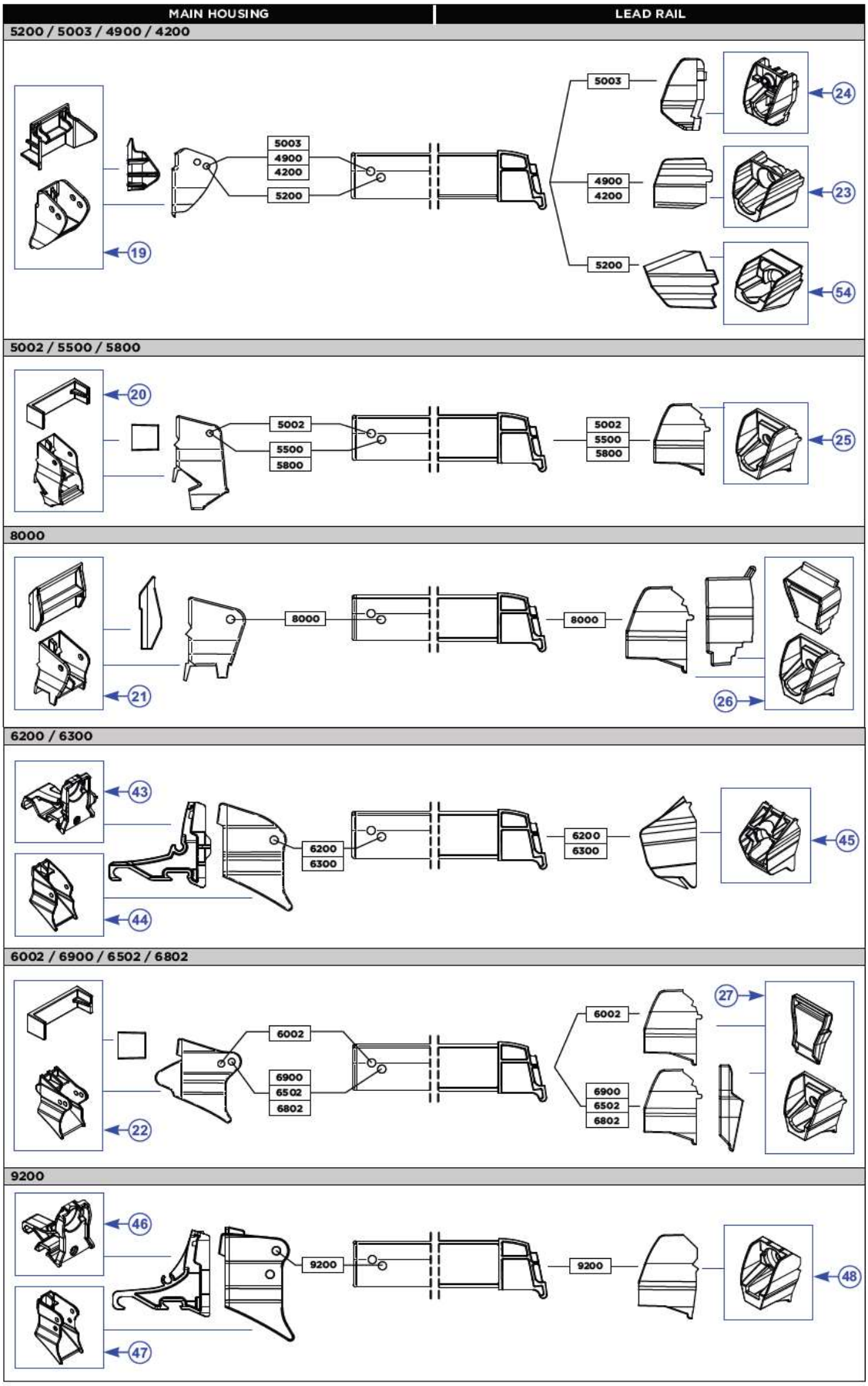
MAIN HOUSING
LEAD RAIL
5200 / 5003 / 4900 / 4200
5003
4900
4200
5200
19
24
23
54
5002 / 5500 / 5800
20
5002
5500
5800
25
8000
21
26
6200 / 6300
43
44
6200
6300
45
6002 / 6900 / 6502 / 6802
6002
6900
6502
6802
22
27
9200
46
47
48

2024 SPARE PARTS LIST

Residence, Panorama & Veduta SRS600 / SRS601 / SRS602

	ART.NR.	DESCRIPTION	RETAIL € (ex.VAT)
1	1500601178	BUCKLE 16MM WHITE - 5 PCS	Not available
2	1500600119	WINDOW TUBE ASSY	22,50
3	1500601169	TENT PEG HALF ROUND - 10PCS	11,60
4	1500601171	GROUNDSHEET PEG - 10PCS	7,60
5	1500601167	MULTI POSITION RUBBER 20CM - 5PCS	13,90
6	1500602154	ELASTIC BAND 8CM - 5PCS	8,60
7	1500601182	NUT KNOB M6 GREY SAFARI RESIDENCE - 3PCS	5,60
8	1500601181	COVER CLAMP PROFILE 2L+2R	5,10
9	1500602155	END PIECE TENSION RAFTER CLAMP	6,90
10	1500601161	CURTAIN HOLDER - 12PCS	11,10
11	1500602029	CONNECTING PROFILE GREY - 1,00M (RESI G1/G2 & PANORAMA)	6,30
	1500603145	CONNECTING PROFILE BLACK - 1,00M (RESIDENCE G3)	8,10
12	1500600139	CLOSING PROFILE MAST L= 1140 MM	11,60
13	1500600138	SUPPORT PROFILE SAFARI RESIDENCE	39,60
14	1500602775	FOOT PIECE MAST SAFARI RESIDENCE 13 2PCS	9,40
15	1500601400	FIXATION SYSTEM MAST RESIDENCE	Not available
16	1500601189	END PIECE MAST SAFARI RESIDENCE 8000	5,30
17	1500601179	END PIECE MAST SAFARI RESIDENCE	4,40
18	1500601187	MAST HOLDER SAFARI RESIDENCE S6+8000	5,30
19	1500601682	POSIT. PIECE + TR HOLDER 5003	6,30
20	1500601180	POSITIONING BLOCK + TENSION RAFTER HOUSING S5	6,90
21	1500601188	POSITIONING BLOCK + TENSION RAFTER HOUSING 8000	5,30
22	1500601184	POSITIONING BLOCK + TENSION RAFTER HOUSING S6	6,90
23	1500602156	INSERT LR 4900	6,70
24	1500601683	INSERT LR 5003 + END PIECE TR CLAMP	6,70
25	1500601183	END PIECE TENSION RAFTER CLAMP + INSERT SR S5	6,10
26	1500601186	END PIECE TENSION RAFTER CLAMP + INSERT SR 8000	8,60
27	1500601185	END PIECE TENSION RAFTER CLAMP + INSERT SR S6	8,60
28	1500602034	SUCTION PAD VW RESIDENCE ASSY	Not available
29	1500602035	BELT HOOKS VW RESIDENCE	Not available
30	1500602157	CLAMPING PROFILE 5 SERIES - 2M50 - LEFT	172,50
31	1500602158	CLAMPING PROFILE 5 SERIES - 2M50 - RIGHT	172,50
32	1500602159	CLAMPING PROFILE 6 SERIES - 2M50 - LEFT	174,20
33	1500602160	CLAMPING PROFILE 6 SERIES - 2M50 - RIGHT	174,20
34	1500602161	CLAMPING PROFILE 6 SERIES - 2M75 - LEFT	182,10
35	1500602162	CLAMPING PROFILE 6 SERIES - 2M75 - RIGHT	182,10
36	1500602163	CLAMPING PROFILE 8000 - 2M75 - LEFT	183,70
37	1500602164	CLAMPING PROFILE 8000 - 2M75 - RIGHT	183,70
38	1500602165	MAST PROFILE - LEFT	160,20
39	1500602166	MAST PROFILE - RIGHT	160,20
40	1500602762	CLAMPING PROFILE 9200 - 3M00 - LEFT	192,40
41	1500602763	CLAMPING PROFILE 9200 - 3M00 - RIGHT	192,40
42	1500602673	LH+RH CLAMPING PROFILE UPGRADE	88,70
43	1500602610	HOUSING CON.PCE TENSION RAFTER 6200	9,10
44	1500602776	TENSION RAFTER HOUSING 6200	6,90
45	1500602616	INSERT LEAD RAIL 6200 2PC	9,10
46	1500602498	HOUSING CON.PCE TENSION RAFTER 9200	9,10
47	1500602777	TENSION RAFTER HOUSING 9200	6,90
48	1500602447	INSERT LEAD RAIL 9200 2PC	9,10
49	1500602778	LH & RH MAST PROFILE EXTENTION XXL	21,40
50	1500602794	FOOT DISK PANORAMA DUCATO H2 (X2)	61,20
51	1500602795	FLEX BASE SNAD STUD 25MM TRANS (X10)	84,70
52	1500602796	SUPPORT PROFILE PANORAMA DUCATO H2	39,60
53	1500602797	EYE BOLT (X2)	20,00
54	1500603076	INSERT LEAD RAIL 5200 2PC	9,10
55	1500603146	CURTAIN STOP 6PCS	5,60
56	1500602967	SIDE RELEASE BUCKLE + STRAP 40CM - 3 PCS	10,40
57	1500603355	TRANSFORMATION KIT RESIDENCE RAFTER 6300	117,20

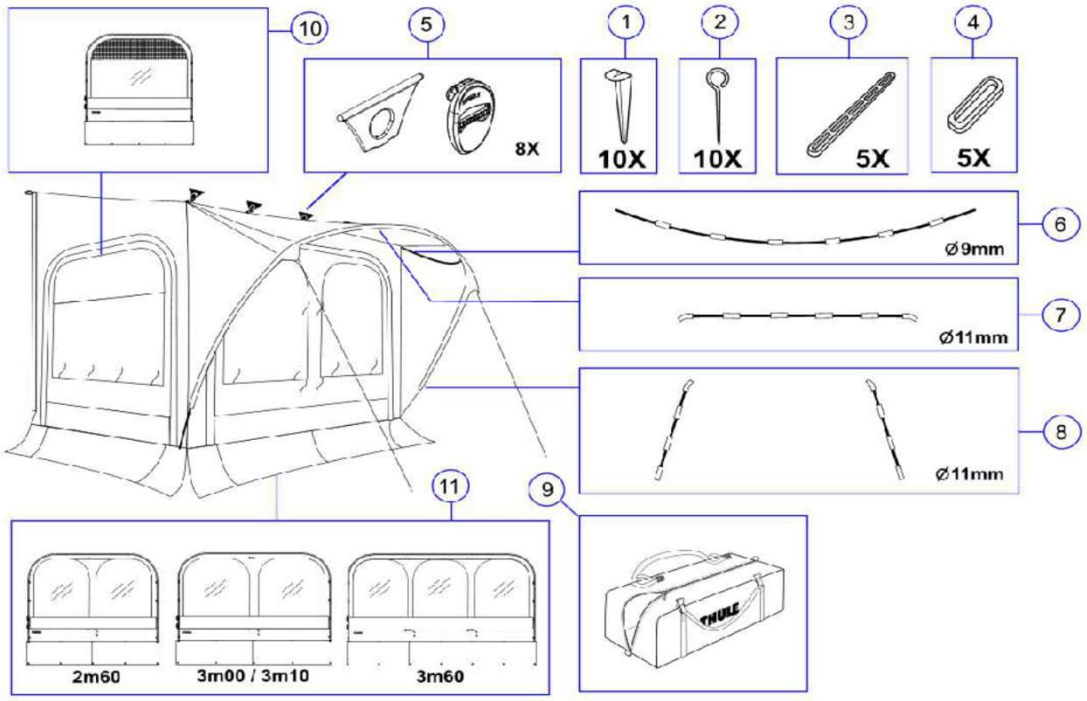

THULE QuickFit SLW601-02

	ART.NR.	DESCRIPTION	RETAIL € (ex.VAT)
1	1500601169	TENT PEG HALF ROUND (X10)	11,60
2	1500601171	GROUNDSHEET PEG (X10)	7,60
3	1500601167	MULTI POSITION RUBBER 20CM (X5)	13,90
4	1500602154	ELASTIC BAND 8CM (X5)	8,60
5	1500602779	FIXATION PIECES LEAD RAIL (X8)	35,30
6	1500602780	TENT POLES Ø9MM ROOF ARCH - 2M60 M (380cm)	30,00
	1500602781	TENT POLES Ø9MM ROOF ARCH - 2M60 L/XL (390cm)	30,00
	1500602782	TENT POLES Ø9MM ROOF ARCH - 3M00 DUC H2 (410cm)	30,00
	1500602878	TENT POLES Ø9MM ROOF ARCH - 3M10 M/L/XL (420cm)	30,00
	1500602784	TENT POLES Ø9MM ROOF ARCH - 3M60 M/L/XL (460cm)	44,00
7	1500602785	TENT POLES Ø11MM UPPER ARCH - 2M60 M (235cm)	42,60
	1500602786	TENT POLES Ø11MM UPPER ARCH - 2M60 L/XL (250cm)	42,60
	1500602787	TENT POLES Ø11mm UPPER ARCH - 3M00 DUC H2 (255cm)	42,60
	1500602880	TENT POLES Ø11mm UPPER ARCH - 3M10 M (260cm)	42,60
	1500602881	TENT POLES Ø11mm UPPER ARCH - 3M10 L/XL (275cm)	42,60
	1500602788	TENT POLES Ø11MM UPPER ARCH - 3M60 M (295cm)	48,20
	1500602789	TENT POLES Ø11MM UPPER ARCH - 3M60 L/XL (315cm)	48,20
8	1500602790	TENT POLES Ø11MM LOWER ARCH (X2) (183cm)	30,00
9	1500602791	QUICK FIT SPORTS BAG	Not available
10	1500602882	QUICKFIT SIDE INSERT	217,80
11	1500602883	QUICKFIT FRONT INSERT - 2M60	232,00
	1500602884	QUICKFIT FRONT INSERT - 3M00/3M10	246,10
	1500602885	QUICKFIT FRONT INSERT - 3M60	266,90

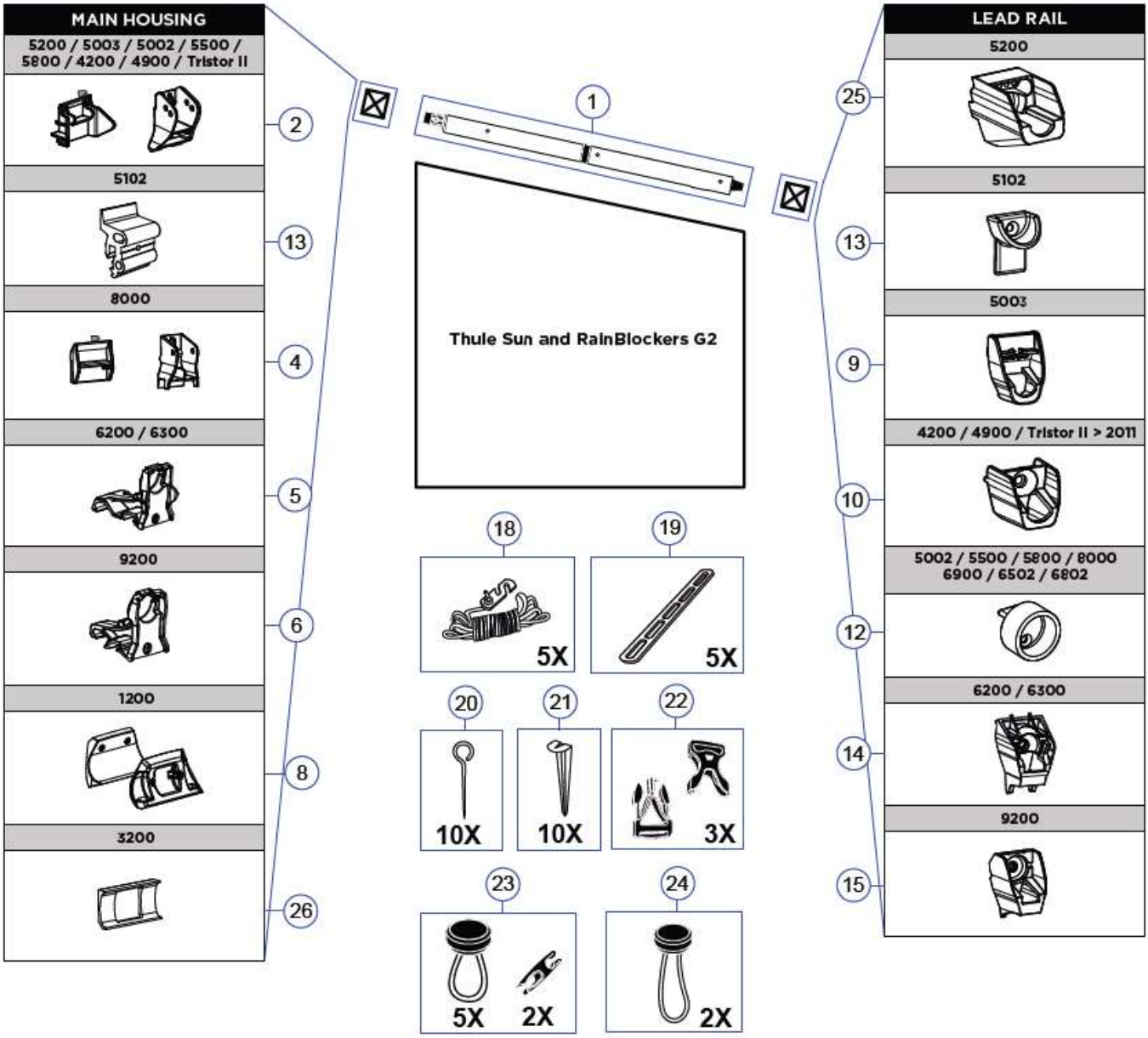

	ART.NR.	DESCRIPTION	RETAIL € (ex.VAT)
1	1500603119	TENSION RAFTER BLOCKER G2 2M00	90,80
	1500602962	TENSION RAFTER BLOCKER G2 2M50	103,60
	1500602963	TENSION RAFTER BLOCKER G2 2M50 TO 1200	103,60
	1500603475	TENSION RAFTER BLOCKER G2 2M50 T 3200	89,70
	1500602964	TENSION RAFTER BLOCKER G2 2M75	123,20
	1500602965	TENSION RAFTER BLOCKER G2 3M00	126,60
2	1500601682	POSIT. PIECE + TR HOLDER	6,30
4	1500601188	POSITIONING BLOCK + TENSION RAFTER HOUSING 8000	5,30
5	1500602610	HOUSING CON.PCE TENSION RAFTER 6200	9,10
6	1500602498	HOUSING CON.PCE TENSION RAFTER 9200	9,10
8	1500602936	TENSION ARM GUARD TO1200 - 2PCS	17,40
9	1500601606	INSERT LEAD RAIL 5003 - 2PCS	4,80
10	1500602156	INSERT LR 4200/4900	6,70
12	1500603101	CON.TEN.RAFTER - L.RAIL 5002/8000 2PC	8,10

13	1500603376	CON.PCS TENSION RAFTER 5102	31,90
14	1500602616	INSERT LEAD RAIL 6200 2PC	9,10
15	1500602447	INSERT LEAD RAIL 9200 2PC	9,10
18	1500602966	NYLON CORD + CORD LOCK - 5 PCS	11,60
19	1500601167	MULTI POSITION RUBBER 20CM - 5PCS	13,90
20	1500601171	GROUNDSHEET PEG - 10PCS	7,60
21	1500601169	TENT PEG HALF ROUND - 10PCS	11,60
22	1500602967	SIDE RELEASE BUCKLE + STRAP 40CM - 3 PCS	10,40
23	1500602968	SHORT PANEL CONNECTION + LOCK - 5PCS + 2 PCS	19,20
24	1500602969	LONG PANEL CONNECTION - 2 PCS	12,10
25	1500603076	INSERT LEAD RAIL 5200 2PC	9,10
26	1500603472	HOUSING CON. PCE TENSION RAFTER 3200	16,70

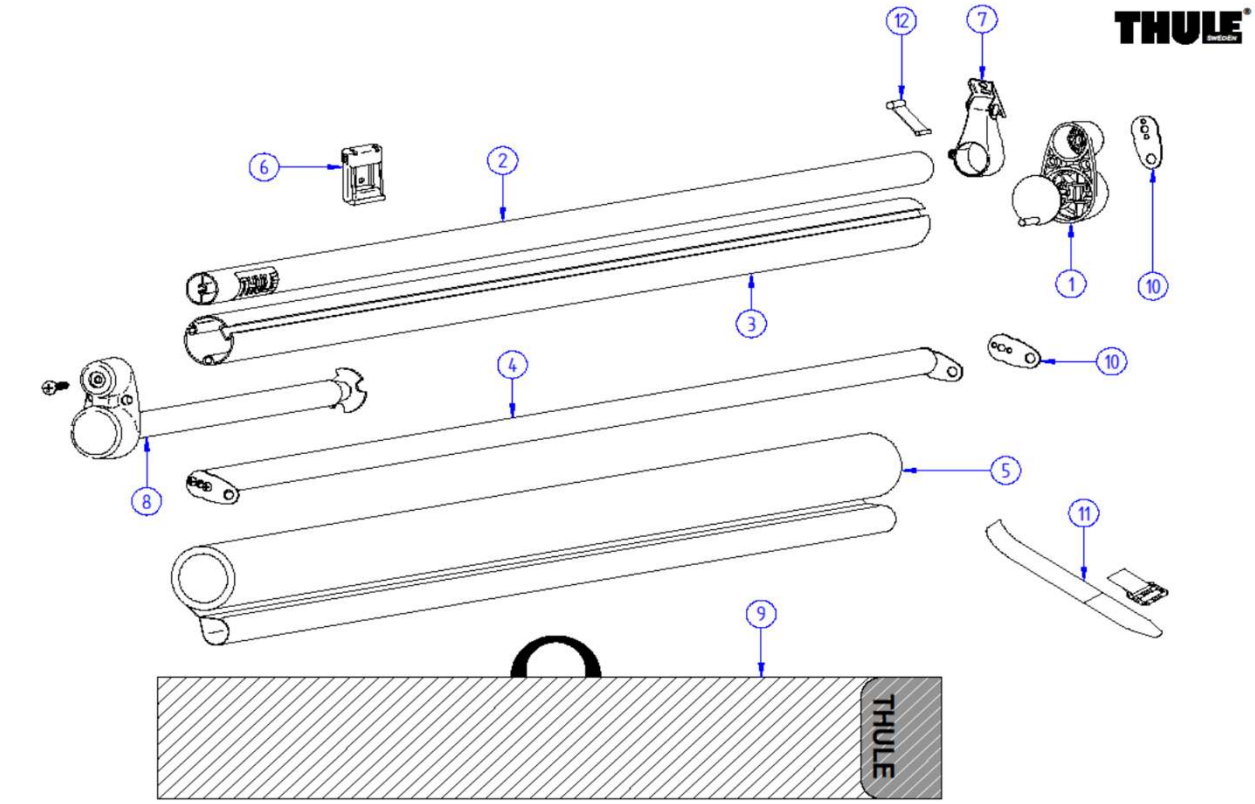

THULE Windscreen WS607-02

	ART.NR.	DESCRIPTION	RETAIL € (ex.VAT)
1	1500602407	ROLLER TUBE END CAP ASSY	10,20
2	1500602408	FIXATION TUBE WINDSCREEN	41,40
3	1500602409	ROLLER TUBE WINDSCREEN	52,80
4	1500602410	HANDLE ASSY WINDSCREEN	45,40
5	1500602411	FABRIC WINDSCREEN	137,70
6	1500601212	PLASTIC BOTT.MOUNT.BRACKET 2PC	18,90
	1500602390	BOTTOM MOUNTING BRACKET BLACK 2PC	18,90
7	1500602412	FIXATION HOLDER ASSY WINDSCREEN	19,20
8	1500602413	ROLLER TUBE END CAP AND SPRING ASSY	37,00
9	1500602414	WINDSCREEN BAG	22,30
10	1500602415	TENT PEG PLATE WINDSCREEN	6,10
11	1500602416	VELCRO ASSY FIXATION WINDSCREEN	5,10
12	1500602809	CARAVANRAIL CONNECTION - 2PC	14,60

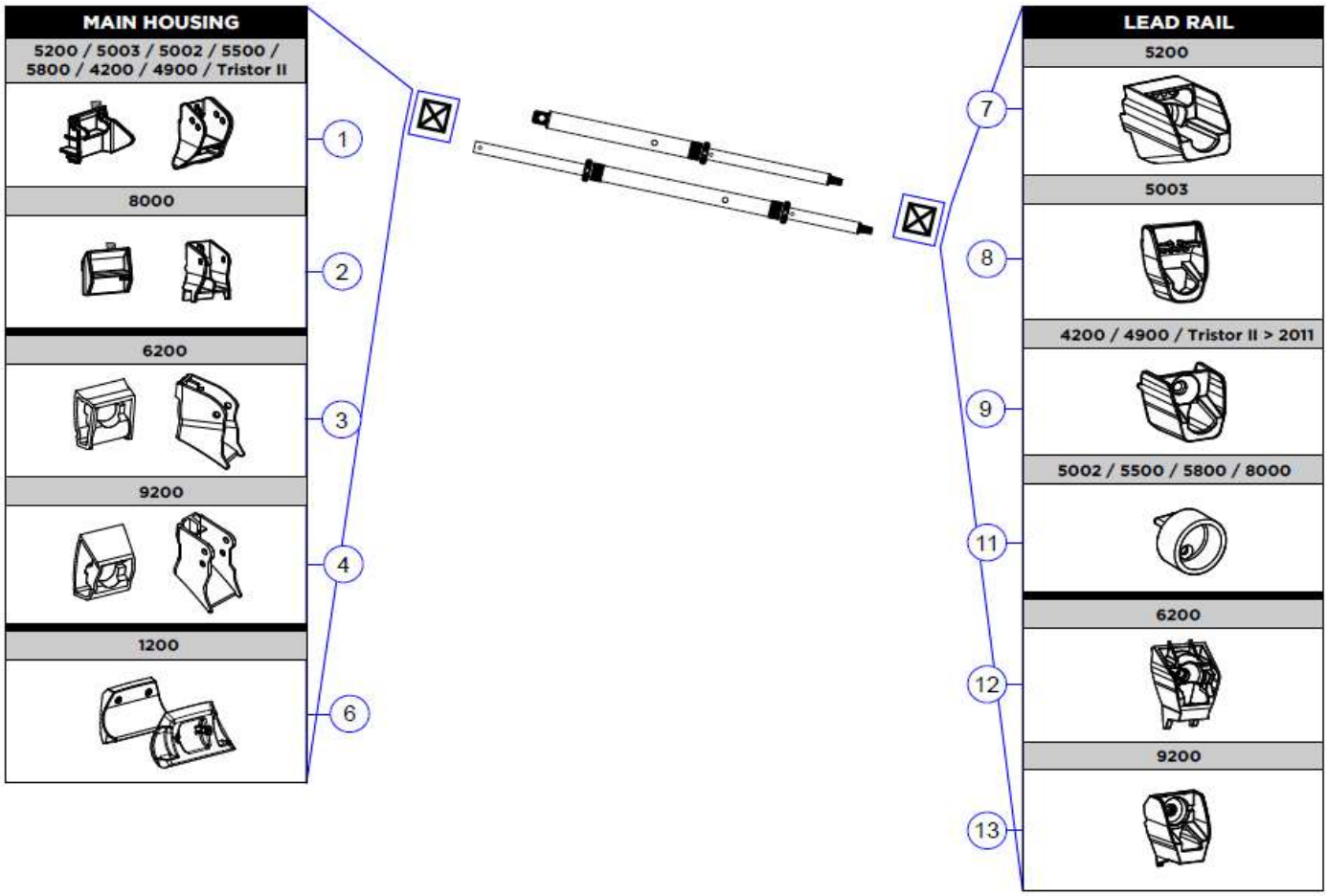

THULE Tension Rafter G2 TR602-01

	ART.NR.	DESCRIPTION	RETAIL € (ex.VAT)
1	1500601682	POSIT. PIECE + TR HOLDER 5003 - 1+1PC	6,30
2	1500601188	POSIT. BLOCK + TENS. RAFTER HOUSING 8000 1+1PC	5,30
3	1500603112	POSIT. BLOCK + TENS. RAFTER HOUSING 6200 1+1PC	10,90
4	1500603113	POSIT. BLOCK + TENS. RAFTER HOUSING 9200 1+1PC	13,90
6	1500602936	TENSION ARM GUARD TO1200 - 2PCS	17,40
7	1500603076	INSERT LEAD RAIL 5200 - 2PCS	9,10
8	1500601606	INSERT LEAD RAIL 5003 - 2PCS	4,80
9	1500602156	INSERT LR 4200/4900	6,70
11	1500603101	CON.TEN.RAFTER - L.RAIL 5002/8000 - 2PCS	8,10
12	1500602616	INSERT LEAD RAIL 6200 - 2PCS	9,10
13	1500602447	INSERT LEAD RAIL 9200 - 2PCS	9,10

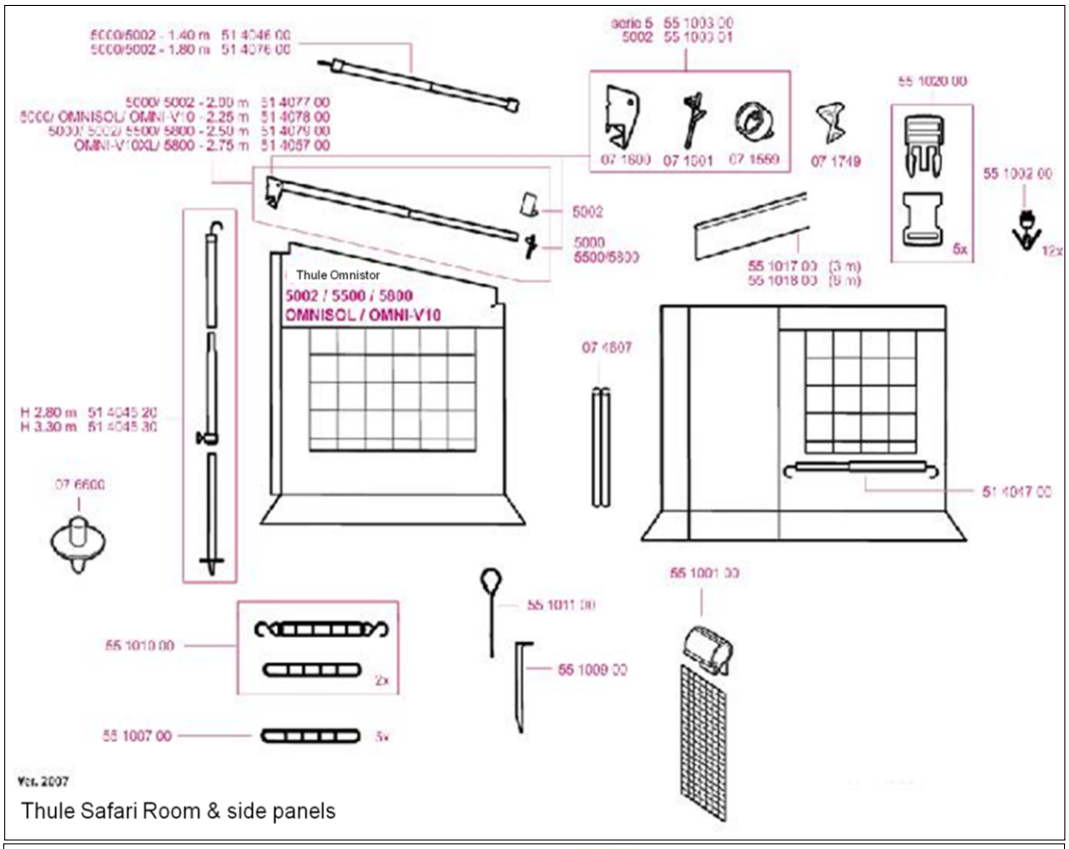

Thule Safari Room & side panels

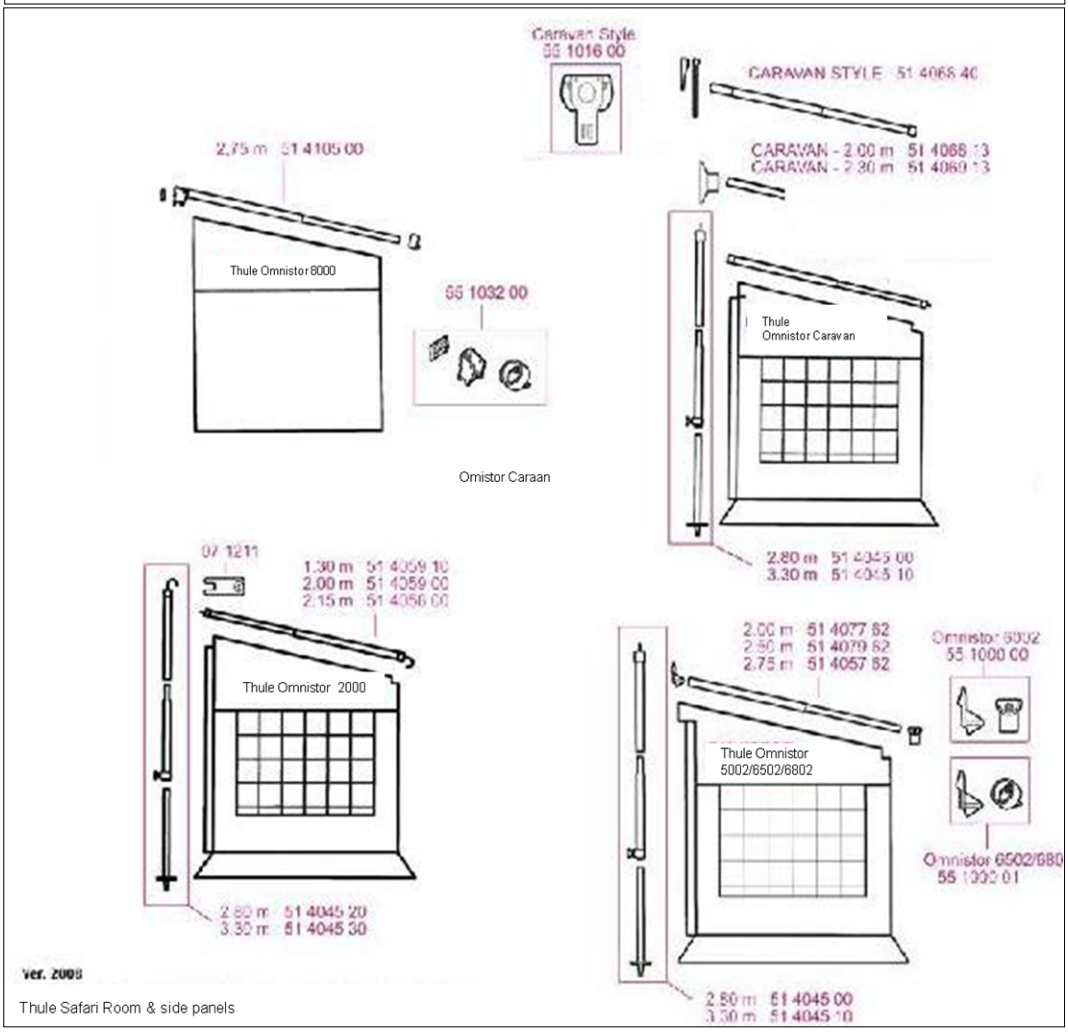

Thule Safari Room & side panels

2024 SPARE PARTS LIST

Safari Room & RBS

	ART.NR.	DESCRIPTION	RETAIL € (ex.VAT)
71211	1500602024	CON.PLATE TENSION RAFTER 2000	Not available
71559	1500602025	CON.TEN.RAFTER - L.RAIL 5002/6502	2,10
71600	1500602026	CON.TEN.RAFTER - HOUSING 5002	Not available
71601	1500602027	CON.TEN.RAFTER - L.RAIL 5000/5500	Not available
71749	1500602028	CON.TEN.RAFTER - L.RAIL OMNI-V10	Not available
74607	1500602029	CONNECTING PROF.PANEL - 1,00M	6,30
76600	1500602030	GROUND PIN MAST SAFARI ROOM	Not available
51404500	1500600116	MAST 2.80M WITH PIN SAFARI ROOM	Not available
51404510	1500601537	MAST 3.30M WITH PIN SAFARI ROOM	Not available
51404520	1500600117	MAST 2.80M WITH HOOK SAFARI ROOM	Not available
51404530	1500600118	MAST 3.30M WITH HOOK SAFARI ROOM	Not available
51404600	1500601403	TENSION RAFTER 4000/5000	Not available
51404700	1500600119	WINDOW TUBE ASSY SAFARI ROOM	22,50
51405700	308234	TENSION RFT 2.75M UNIVERSAL	Not available
51405762	308235	TENSION RFT 2.75M SERIE 6	Not available
51405800	308236	TENSION RFT 2.15M FOR 2000	Not available
51405900	308237	TENSION RFT 2.00M FOR 2000	Not available
51405910	1500602031	TENSION RAFTER 2000 - 1,30M	Not available
51406813	308238	TENSION RFT 2.00M CARAVAN	Not available
51406840	308239	TENSION RFT CARAVAN STYLE	Not available
51406913	308240	TENSION RFT 2.30M CARAVAN	Not available
51407600	308241	TENSION RFT 1.80M UNIVERSAL	Not available
51407700	308242	TENSION RFT 2.00M UNIVERSAL	Not available
51407762	308243	TENSION RFT 2.00M SERIE 6	Not available
51407800	308244	TENSION RFT 2.25M UNIVERSAL	Not available
51407900	308245	TENSION RFT 2.50M UNIVERSAL	Not available
51407962	308246	TENSION RFT 2.50M SERIE 6	Not available
51407990	1500602032	TENSION RAFTER 9000 - 2,50M	Not available
51410500	308234	TENS RFT RB/SB/ 2.75M 8000	Not available
	1500602764	TENS RFT RB/SB/ 3,00M 9200	Not available
55100000	1500601158	CON.PCE TENSION RAFTER 6002	5,80
55100001	1500601159	CONNECTION PIECE TR 6502/6900	Not available
55100100	1500601160	NYLON TENTCLIP (6) SAFARI ROOM	11,90
55100200	1500601161	WINDOW HOLDER (12) SAFARI ROOM	11,10
55100300	1500601162	CONNECTION PCS TR 5000 SAFARI ROOM	Not available
55100301	1500601163	CONNECTION PCS TR 5002 SAFARI ROOM	8,10
55100400	1500601163	CONNECTION PCS TR 5500/OS SAFARI SR	8,10
55100700	1500601167	LADDER RUBBERRING 20CM-5PCS SR	13,90
55100900	1500601169	TENTPEG HALFROUND-10PCS SR	11,60
55101000	1500601170	MULTI POS. ELAST.+S-HOOK 4PCS	Not available
55101100	1500601171	GROUNDSHEETPEG - 10 PCS	7,60
55101200	1500601172	AWNING BRACKET 2 PCS	Not available
55101700	1500601175	DRAP ROPE 3.00M	32,30
55101800	1500601176	DRAP ROPE 6.00M	58,00
55102000	1500601178	BUCKLE 16MM WHITE (5 PIECES)	Not available
55103200	1500601399	CONNECTION PCS TENSION RAFTER RB/SB 8000	9,10

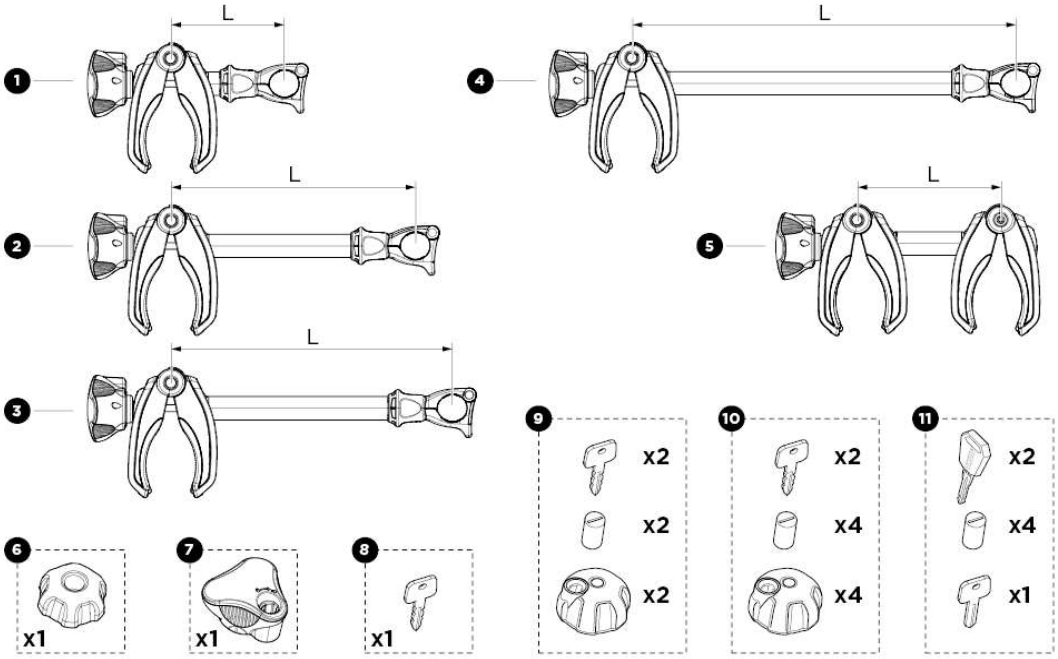

Thule-Bike-Rack_Arms-Knobs-Keys (BIA)
OS_3BIA0001-00_Thule-Bike-Rack_Arms-Knobs-Keys_SP-List
10/01/2023

	ART.NR.	DESCRIPTION	RETAIL € (ex.VAT)
1	302520	BIKE ARM #1 ACUTIGHT WITH LOCK - ANO (12cm)	See price list
	302525	BIKE ARM #1 ACUTIGHT WITH LOCK - BLACK (12cm)	See price list
2	302521	BIKE ARM #2 ACUTIGHT WITH LOCK - ANO (26cm)	See price list
	302526	BIKE ARM #2 ACUTIGHT WITH LOCK - BLACK (26cm)	See price list
3	302522	BIKE ARM #2,5 ACUTIGHT WITH LOCK - ANO (30cm)	See price list
	302527	BIKE ARM #2,5 ACUTIGHT WITH LOCK - BLACK (30cm)	See price list
4	302523	BIKE ARM #3 ACUTIGHT WITH LOCK - ANO (41cm)	See price list
	302528	BIKE ARM #3 ACUTIGHT WITH LOCK - BLACK (41cm)	See price list
5	302524	BIKE ARM #4 ACUTIGHT WITH LOCK - ANO (DOUBLE CLAMP)	See price list
	302529	BIKE ARM #4 ACUTIGHT WITH LOCK - BLACK (DOUBLE CLAMP)	See price list
6	1500030364	BIKE ARM KNOB WITHOUT LOCK	6,10
7	1500052738	BIKE ARM ACUTIGHT KNOB WITHOUT LOCK	12,40
8	1500002XXX	SPARE KEY FOR BIKE ARM LOCK (XXX = KEY NR.)	20,30
9	1500603771	BIKE ARM KNOB WITH LOCK - SET OF 2	35,30
10	1500603772	BIKE ARM KNOB WITH LOCK - SET OF 4	86,90
11	450400	THULE ONE KEY SYSTEM - 4PCS	See price list

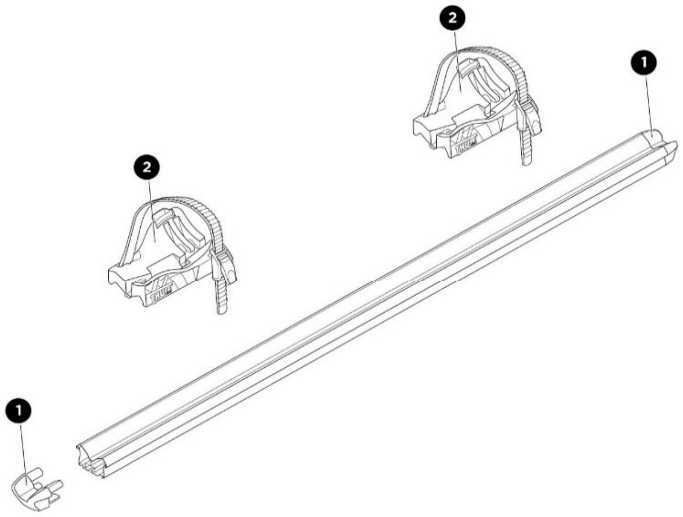

Thule Fat Bike Rail Endcap-Adapter (BIA)
OS_03BIA0002-00_Thule-Fat-Bike-Rail_Endcap-Adapter_SP-List
20/11/2023

	ART.NR.	DESCRIPTION	RETAIL € (ex.VAT)
1	1500603795	END CAPS FATBIKE RAIL (2PCS)	14,90
2	1500052846	WHEEL STRAPS (2PCS)	9,90

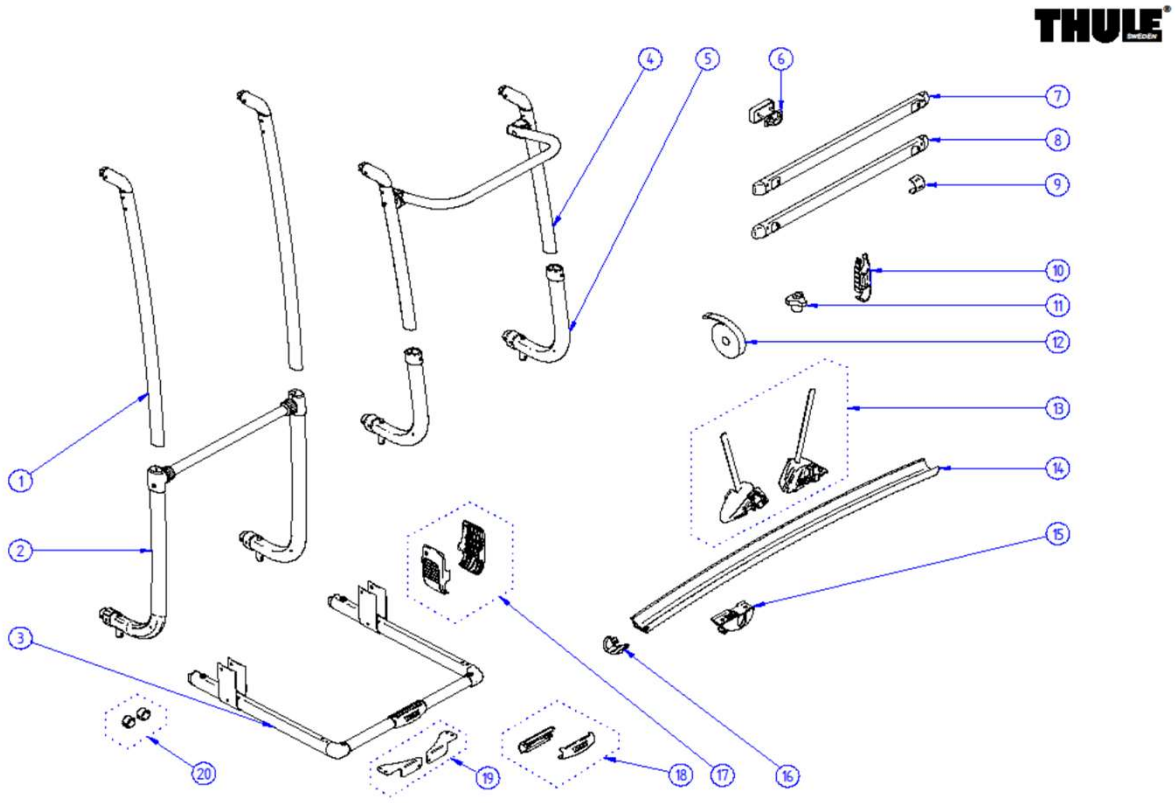

	ART.NR.	DESCRIPTION	RETAIL € (ex.VAT)
1	1500602393	EXCELLENT ARM (1x)	50,90
	1500603213	EXCELLENT ARM BLACK (1x)	54,90
2	1500602394	EXCELLENT CROSSBAR + T-PIECES + BODY	113,00
	1500603214	EXCELLENT CROSSBAR + T-PIECES + BODY BLACK	110,80
3	1500602397	EXCELLENT PLATFORM WITHOUT RAILS	183,00
	1500603215	EXCELLENT PLATFORM WITHOUT RAILS BLACK	191,90
4	1500602395	EXCELLENT SV ARMS+CROSSBAR	113,00
5	1500602396	EXCELLENT SV BODY + CONNECTION PIECE (1x)	50,90
6	1500602383	G2 UPPER FIXATION KIT (2x)	17,40
7	309828	G2 TOP MOUNTING RAIL	See price list
8	306946	BOTTOM MOUNTING RAIL	See price list
	308954	BOTTOM MOUNTING RAIL BLIND	See price list
9	307328	COVER MOUNTING RAIL (2pcs)	See price list
10	1500602400	PLATFORM HOLDER (2x)	15,10
11	1500603527	KNOB WITH NUT BLACK - 2PC	7,60
12	1500602387	SAFETY STRAP 2,00M BLACK	9,70
13	1500602403	EXCELLENT WHEEL HOLDER W PUMP BUCKLE (1L+1R)	39,60
14	1500602401	G2 RAIL PROFILE	42,10
	1500603216	G2 RAIL PROFILE BLACK	46,70
15	1500602621	EXCELLENT RAILSLIDER BLACK (2x)	16,90
16	1500602402	G2 ENDCAP RAIL (2x)	9,40
17	1500602398	EXCELLENT HINGE COVERS (1L+1R)	7,60
18	1500602399	EXCELLENT PLATFORM HANDLE	7,60
19	1500602697	PLATFORM CORNER CONNECTION	Not available
20	1500602751	ANTI RATTLING BOTTOM MOUNTING RAIL (2x)	3,40

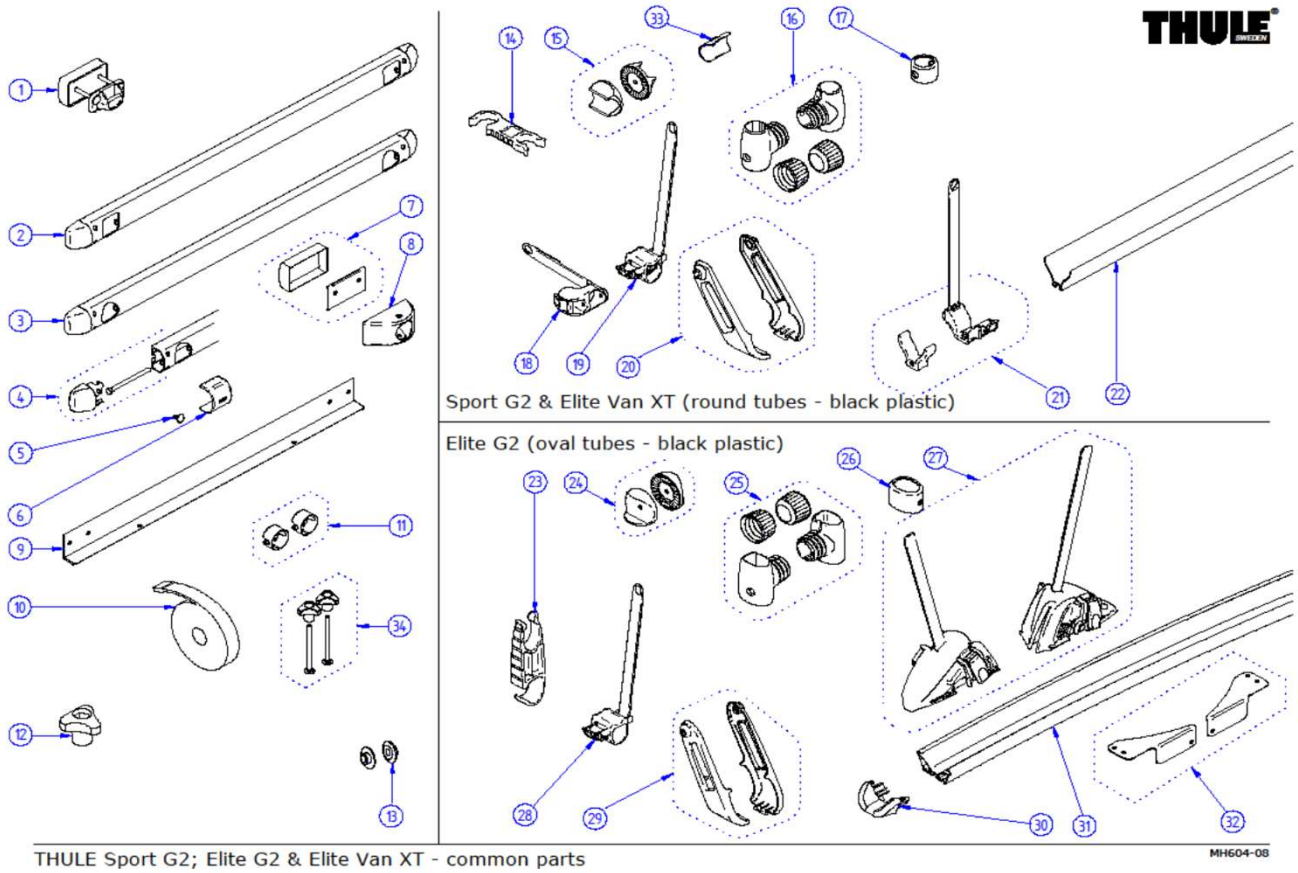

	ART.NR.	DESCRIPTION	RETAIL € (ex.VAT)
1	1500602383	G2 UPPER FIXATION KIT (2x)	17,40
2	309828	G2 TOP MOUNTING RAIL	See price list
3	306946	BOTTOM MOUNTING RAIL	See price list
	308954	BOTTOM MOUNTING RAIL BLIND	See price list
4	1500600549	SPORT/ELITE CAP MOUNTING PROFILE + BOLT (2x)	13,40
5	1500602750	MOUNTING RAIL SCREW NAIL (x100)	43,80
	1500603478	MOUNTING RAIL SCREW NAIL (X8)	5,10
6	307328	COVER MOUNTING RAIL (2pcs)	See price list
7	1500602360	LOWER FIXATION KIT INSIDE (2x)	11,10
8	1500602384	FOOT + FOOT COVER (2x)	26,70
9	1500601518	ANGLE SUPPORT RAIL DUCATO	16,20
10	1500602387	SAFETY STRAP 2,00M BLACK	9,70
11	1500602751	ANTI RATTLING BOTTOM MOUNTING RAIL (2x)	3,40
12	1500603527	KNOB WITH NUT BLACK - 2PC	7,60
13	1500602898	GLIDING BEARINGS FOR HINGES (100 PCS)	12,30
14	1500602385	G2 PLATFORM HOLDER 30/34	7,60
	1500602622	G2 PLATFORM HOLDER 34/34	7,60
15	1500602623	G2 SERRATED PIECE round (2x)	10,20
16	1500602624	G2 SPORT T-PIECE (2x)	10,60
17	1500602625	G2 CONNECTION PIECE DIA. 34/30 (2x)	2,10
18	1500602626	PLATFORM LOCK VERTICAL (2x)	10,20
19	1500602627	PLATFORM LOCK (1L+1R)	9,90
20	1500602620	SPORT G2 HINGE COVERS BLACK 20° (1L+1R)	5,60
	1500602628	SPORT G2 HINGE COVERS BLACK 40° (1L+1R)	5,60
21	1500602629	SPORT G2 ENDCAP + WHEEL STRAPS FOR V-RAIL (2x)	19,50
22	1500602388	V-RAIL PROFILE	30,70
23	1500602400	PLATFORM HOLDER (2x)	15,10
24	1500602630	G2 SERRATED PIECES oval (1+1)	12,30
25	1500602631	G2 OVAL T-PIECES (1L+1R)	10,90

26	1500602632	G2 CONNECTION PIECE OVAL 42/48 (2x)	5,60
27	1500602403	WHEEL HOLDER W PUMP BUCKLE (2x)	39,60
28	1500602633	PLATFORM LOCK OVAL (1L+1R)	9,70
29	1500602634	ELITE G2 HINGE COVERS BLACK (1L+1R)	6,90
30	1500602402	G2 ENDCAP RAIL (2x)	9,40
31	1500602401	G2 RAIL PROFILE	42,10
32	1500602697	PLATFORM CORNER CONNECTION	Not available
33	1500603157	SERRATED INSERT 30/34 BLACK 4PCS	3,40
34	1500603175	BOLT 90MM + KNOB HIGH (2PCS)	7,00

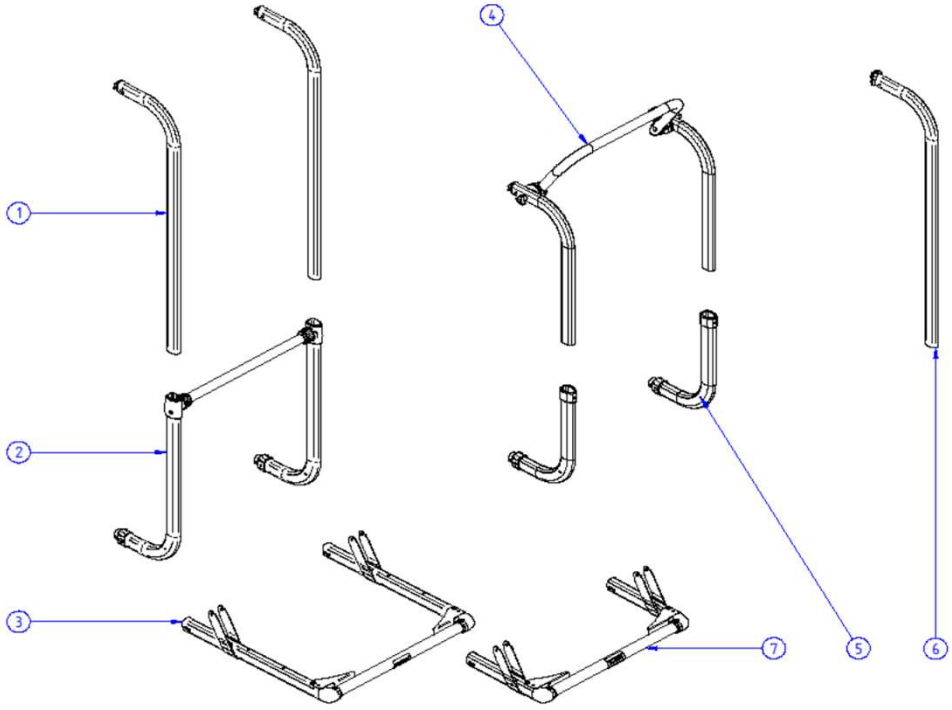

THULE Elite G2 LV / Elite G2 SV / Elite G2 HH / Elite G2 One Bike MH605-01

	ART.NR.	DESCRIPTION	RETAIL € (ex.VAT)
1	1500602635	ELITE G2 LV ARM (1x)	36,50
2	1500602636	ELITE G2 LV BODY + CROSSBAR + T-PIECES	79,40
3	1500602637	ELITE G2 PLATFORM WITHOUT RAILS	118,60
4	1500602638	ELITE G2 SV ARMS + CROSSBAR	71,60
5	1500602639	ELITE G2 SV BODY + CONNECTION PIECE (1x)	40,70
6	1500602640	ELITE G2 HH ARM (1x)	36,50
7	1500603474	ELITE G2 ONE BIKE PLATFORM WITHOUT RAILS	104,80

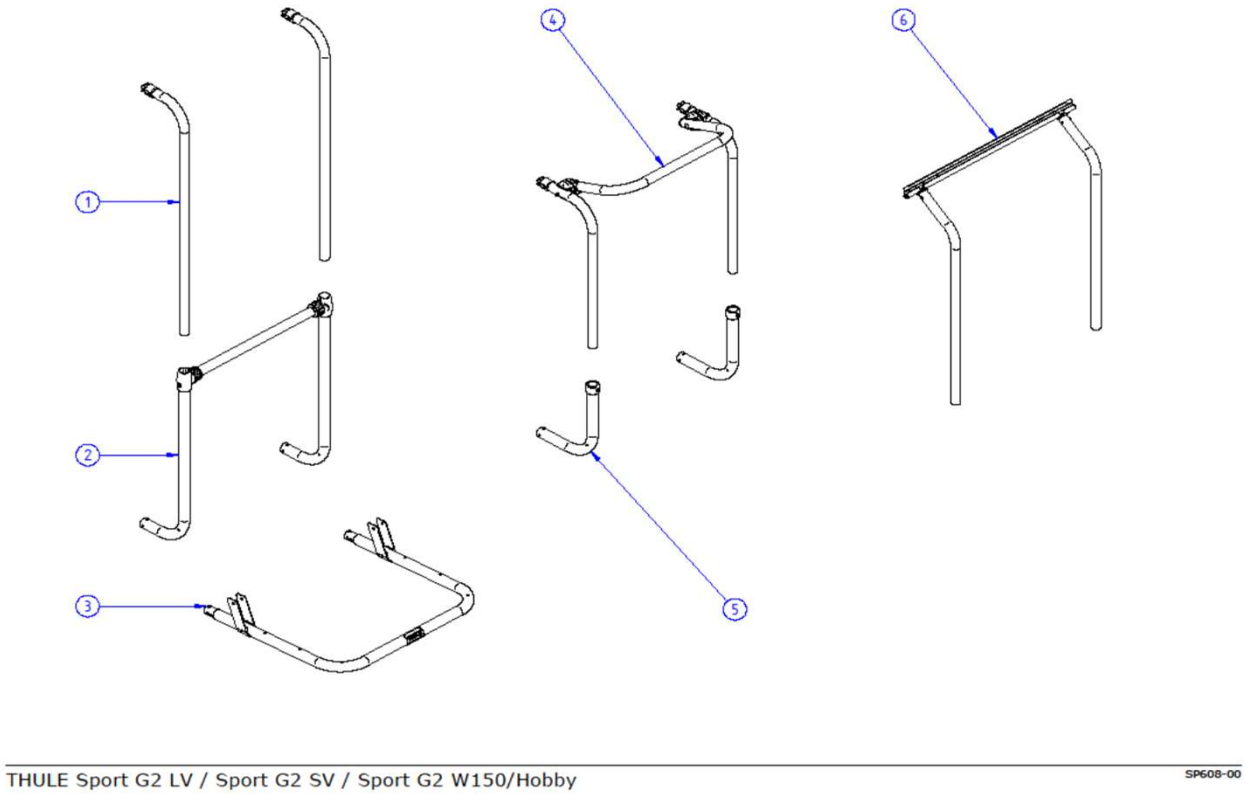

	ART.NR.	DESCRIPTION	RETAIL € (ex.VAT)
1	1500602378	SPORT G2 LV ARM (1x)	42,80
2	1500602379	SPORT G2 LV BODY + CROSSBAR + T-PIECES	67,30
3	1500602641	SPORT G2 PLATFORM WITHOUT RAILS	94,40
4	1500602381	SPORT G2 SV ARMS + CROSSBAR	78,70
5	1500602382	SPORT G2 SV BODY + CONNECTION PIECE (1x)	30,00
6	1500602642	SPORT G2 W150/HOBBY ARMS + RAIL	60,50

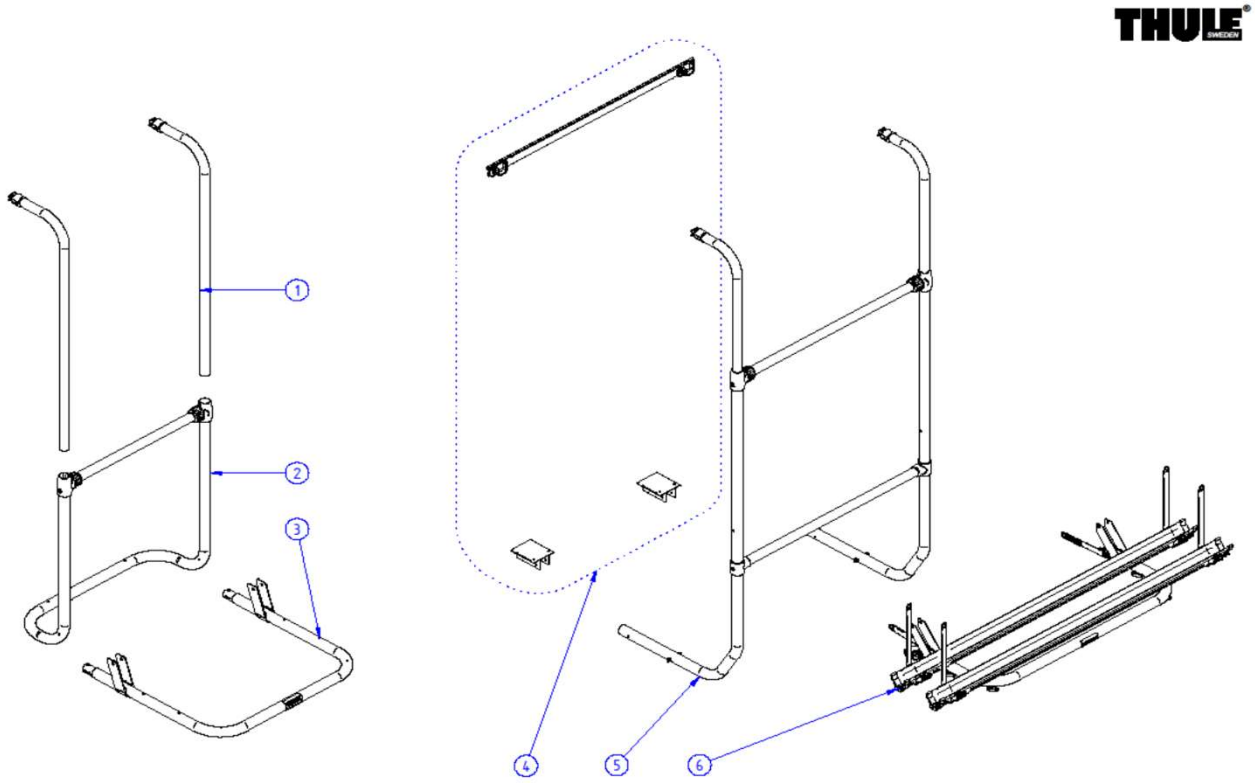

THULE Sport G2 tour / Sport G2 Universal
SP609-00

	ART.NR.	DESCRIPTION	RETAIL € (ex.VAT)
1	1500602649	SPORT G2 TOUR ARM (1x)	32,80
2	1500602650	SPORT G2 TOUR BODY	91,00
3	1500602641	SPORT G2 PLATFORM WITHOUT RAILS	94,40
4	1500602682	SPORT G2 UNIVERSAL FIXATION SET	58,20
5	1500602651	SPORT G2 UNIVERSAL BODY	177,40
6	1500602652	SPORT G2 UNIVERSAL PLATFORM COMPLETE	129,50

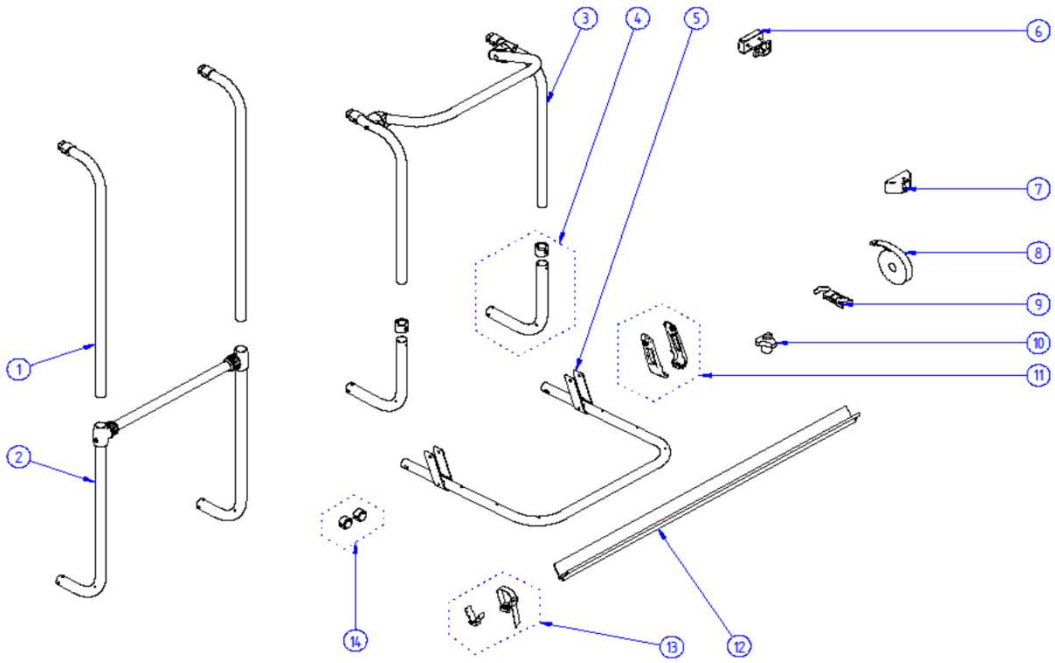

THULE Essential LV - Essential SV
ES600-03

	ART.NR.	DESCRIPTION	RETAIL € (ex.VAT)
1	1500602378	SPORT G2 LV ARM (1x)	42,80
2	1500602379	SPORT G2 LV CROSSBAR + T-PIECES + BODY	67,30
3	1500602381	SPORT G2 SV ARMS+CROSSBAR	78,70
4	1500602382	SPORT G2 SV BODY + CONNECTION PIECE (1x)	30,00
5	1500602380	ESSENTIAL PLATFORM WITHOUT RAILS	94,40
6	1500602383	G2 UPPER FIXATION KIT (2x)	17,40
7	1500602384	FOOT + FOOT COVER (2x)	26,70
8	1500602387	SAFETY STRAP 2,00M BLACK	9,70
9	1500602385	G2 PLATFORM HOLDER 30/34	7,60
10	1500602386	KNOB WITH NUT BLACK H18mm (2x)	Not available
	1500602020	KNOB WITH NUT BLACK H28mm	Not available
11	1500602620	SPORT G2 HINGE COVERS BLACK 20° (1L+1R)	5,60
12	1500602388	V-RAIL PROFILE	30,70
13	1500602389	ESSENTIAL ENDCAP + WHEEL STRAPS FOR V-RAIL (2x)	16,20
14	1500602751	ANTI RATTLING BOTTOM MOUNTING RAIL (2x)	3,40

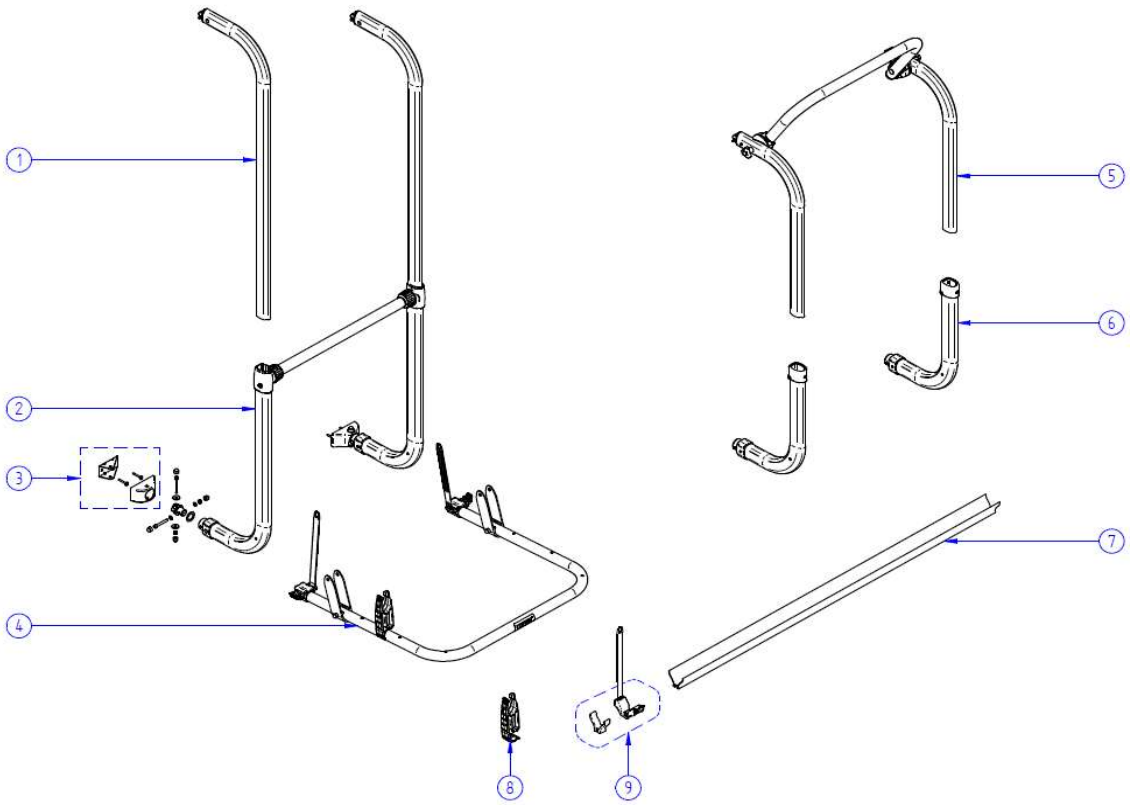

THULE Esse4 ES605-00

	ART.NR.	DESCRIPTION	RETAIL € (ex.VAT)
1	1500602635	ELITE G2 LV ARM (1x)	36,50
	1500603479	ELITE G2 LV BLACK ARM (1x)	42,80
2	1500602636	ELITE G2 LV BODY + CROSSBAR + T-PIECES	79,40
	1500603480	ELITE G2 LV BLACK BODY + CROSSBAR + T-PIECES	96,60
3	1500602384	FOOT + FOOT COVER (2x)	26,70
4	1500603212	ESSE4 PLATFORM WITHOUT RAILS	94,40
	1500603481	ESSE4 PLATFORM BLACK WITHOUT RAILS	99,00
5	1500602638	ELITE G2 SV ARMS + CROSSBAR	71,60
6	1500602639	ELITE G2 SV BODY + CONNECTION PIECE (1x)	40,70
7	1500602388	V-RAIL PROFILE	30,70
	1500603482	V-RAIL PROFILE BLACK	36,50
8	1500602765	ESSE4 PLATFORM HOLDER (1X)	3,90
9	1500602629	SPORT G2 ENDCAP + WHEELSTRAPS FOR V-RAIL (2x)	19,50

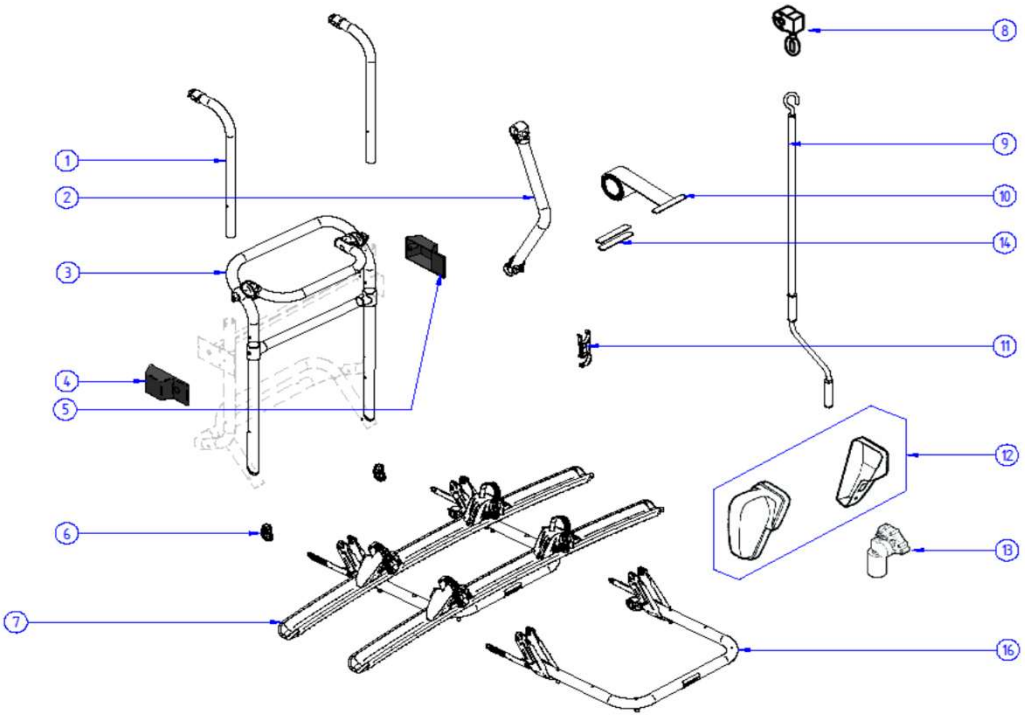

THULE Lift V16 OBL606-02

	ART.NR.	DESCRIPTION	RETAIL € (ex.VAT)
1	1500603103	LIFT V16 ARM (1x)	36,50
	307371	LIFT V16 EXTENSION ARMS 150CM (2pcs)	See price list
2	1500603104	LIFT V16 TIE TUBE (1x)	40,70
3	1500603105	LIFT V16 SUPPORTING FRAME	140,60
4	1500603106	LIFT V16 SIDEPLATE COVER BLACK LH - MANUAL & 12V	46,70
5	1500603107	LIFT V16 SIDEPLATE COVER BLACK RH - MANUAL	50,90
6	1500603108	LIFT V16 TUBE STOP 40° (2pcs)	7,90
7	1500603109	LIFT V16 PLATFORM COMPLETE	326,30
8	1500601972	LIFT MANUAL GEAR	36,10
9	1500603148	LIFT MANUAL HAND CRANK 70cm	21,80
10	1500600467	LIFT STRAP - 2PCS	13,40
11	1500602622	G2 PLATFORM HOLDER 34/34 (1x)	7,60
12	1500603110	LIFT V16 12V MOTOR COVER RH BLACK - 2PCS	115,70
13	1500600504	LIFT 12V MOTOR	291,90
14	1500603177	REPAIR KIT LIFT INSERT PULL STRAPS	8,70
15	1500603118	REPAIR KIT LIFT MOTOR GEAR	13,70
16	1500603484	LIFT V16 PLATFORM WITHOUT RAILS	176,90

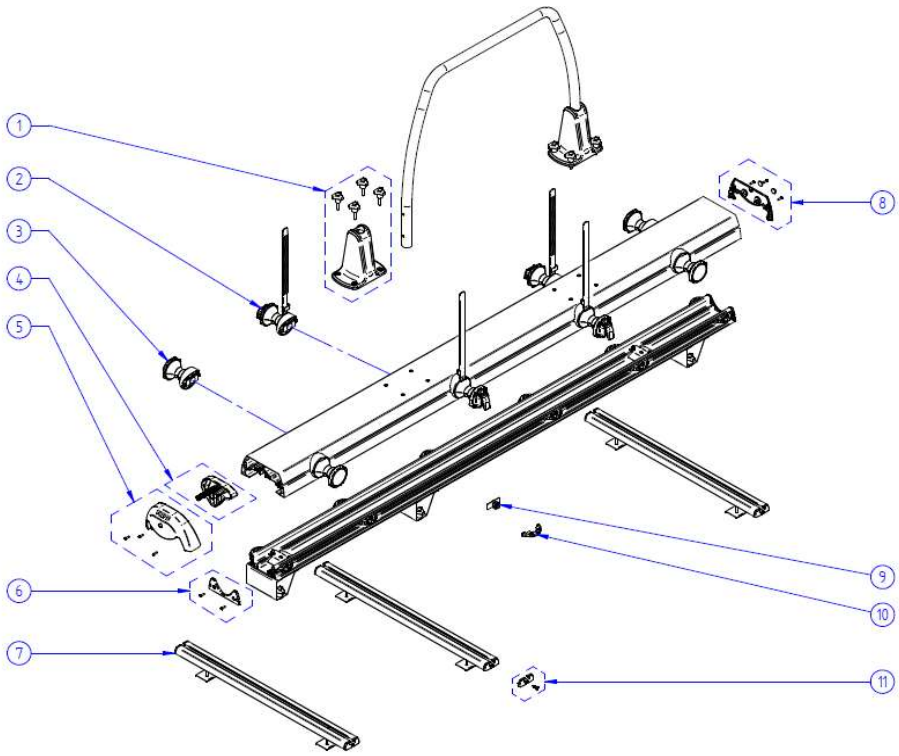

THULE VeloSlide
GR600-01

	ART.NR.	DESCRIPTION	RETAIL € (ex.VAT)
1	1500603203	VELOSLIDE CAP FOR FRAMEHOLDER (1x) + BOLT KNOBS (4x)	9,90
2	1500603204	VELOSLIDE WHEELHOLDER WITH STRAP (1x)	25,20
3	1500603205	VELOSLIDE WHEELHOLDER WITHOUT STRAP (1x)	17,70
4	1500603206	VELOSLIDE HANDLE	4,60
5	1500603207	VELOSLIDE CAP RUNNER FRONT	13,70
6	1500603208	VELOSLIDE CAP TRACK (1x)	2,10
7	302015	VELOSLIDE MOUNTING RAILS - 70cm	See price list
7	302016	VELOSLIDE MOUNTING RAILS - 140cm	See price list
8	1500603209	VELOSLIDE CAP RUNNER REAR	5,30
9	1500603210	WHEEL ASSEMBLY (2x)	11,90
10	1500603211	WHEEL GUIDE (2x)	5,10
11	1500603405	VELOSLIDE CAP MOUNTING RAIL (6x)	5,60

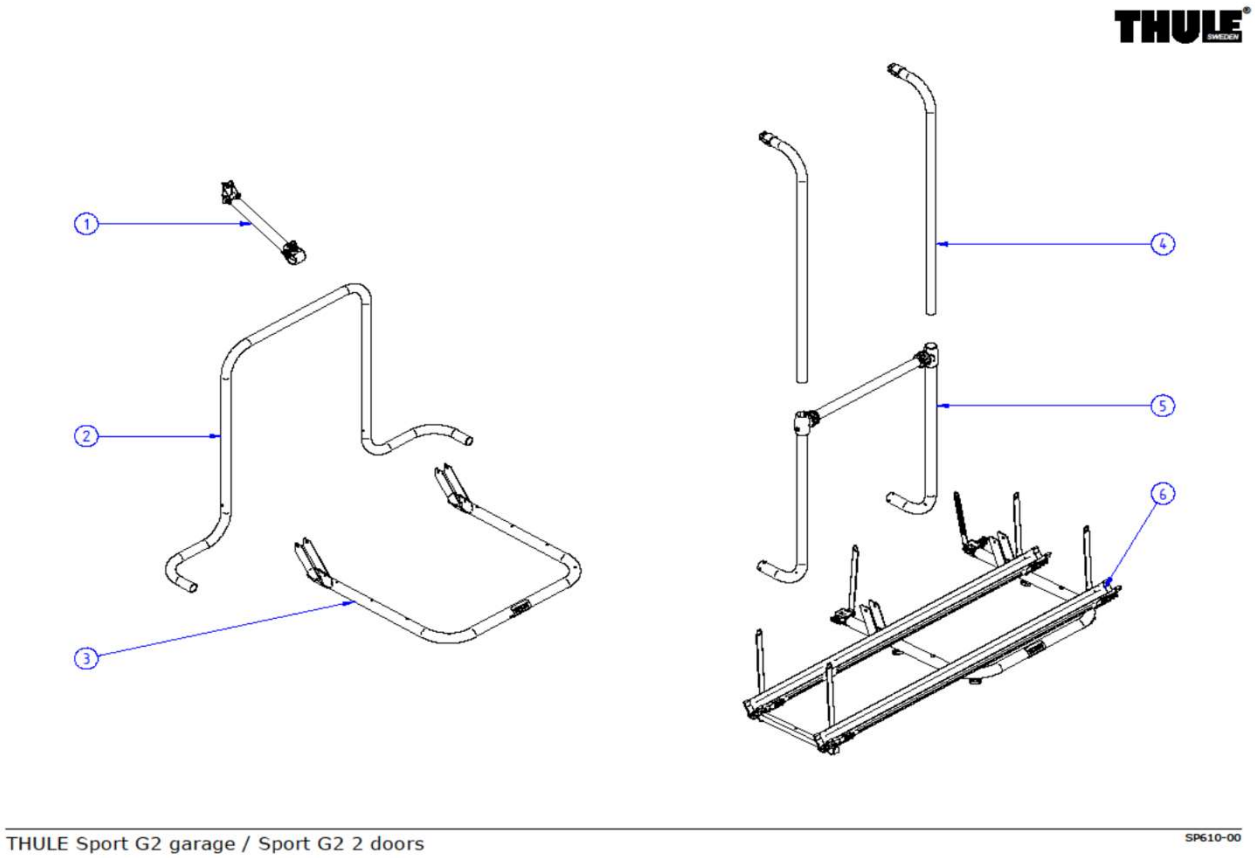

	ART.NR.	DESCRIPTION	RETAIL € (ex.VAT)
1	1500602653	SPORT G2 GARAGE WALL FIXATION	18,60
2	1500602654	SPORT G2 GARAGE BODY	65,80
3	1500602655	SPORT G2 GARAGE PLATFORM WITHOUT RAILS	109,10
4	1500602378	SPORT G2 LV ARM (1x)	42,80
5	1500602656	SPORT G2 2 DOORS BODY	65,60
6	1500602657	SPORT G2 2 DOORS PLATFORM COMPLETE	126,80

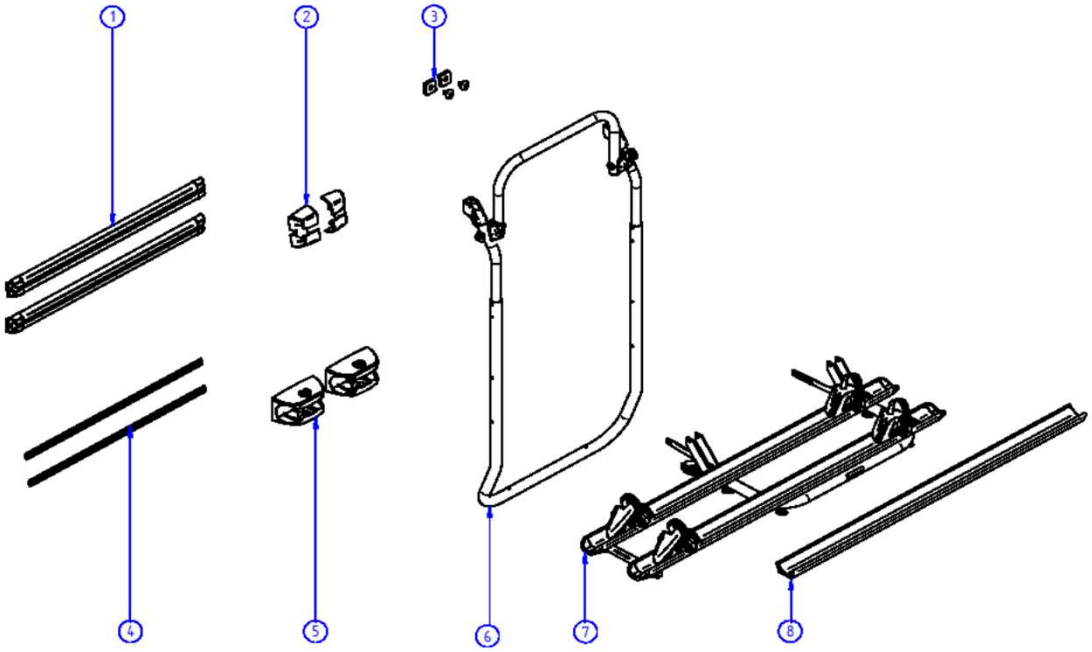

THULE Elite Van XT
MH607-03

	ART.NR.	DESCRIPTION	RETAIL € (ex.VAT)
1	1500603150	MOUNTING RAIL D/J/B >2007 TOP + BOTTOM	203,80
	1500603217	MOUNTING RAIL D/J/B >2007 TOP + BOTTOM BLACK	216,80
	1500603218	MOUNTING RAIL VW CRAFTER>2017 TOP + BOTTOM BLACK	216,80
	1500603528	MOUNTING RAIL SPRINTER & CRAFTER <2017 TOP + BOTTOM BLACK	216,80
	1500603766	MOUNTING RAIL FORD TRANSIT >2015	216,80
2	1500603151	MOUNTING RAIL ENDCAP 2PCS	4,40
3	1500603152	MOUNTING RAIL CONNECTION 4PCS	6,30
	1500603572	MOUNTING RAIL CONN 4PCS - SPRINTER & CRAFTER <2017	6,30
	1500603767	MOUNTING RAIL CONNECTION - FORD TRANSIT >2015	6,30
4	1500603153	COVER STRIP RIBBED 750mm 2PCS	7,10
5	1500603154	ELITE VAN XT FOOT + COVER 2PCS	8,60
6	1500603155	ELITE VAN XT BODY	144,00
	1500603219	ELITE VAN XT BODY BLACK	153,40
7	1500603156	ELITE VAN XT PLATFORM COMPLETE	204,00
	1500603220	ELITE VAN XT PLATFORM COMPLETE BLACK	218,30
8	1500603724	ELITE VAN XT RAIL PROFILE	42,10
	1500603725	ELITE VAN XT RAIL PROFILE - BLACK	46,70

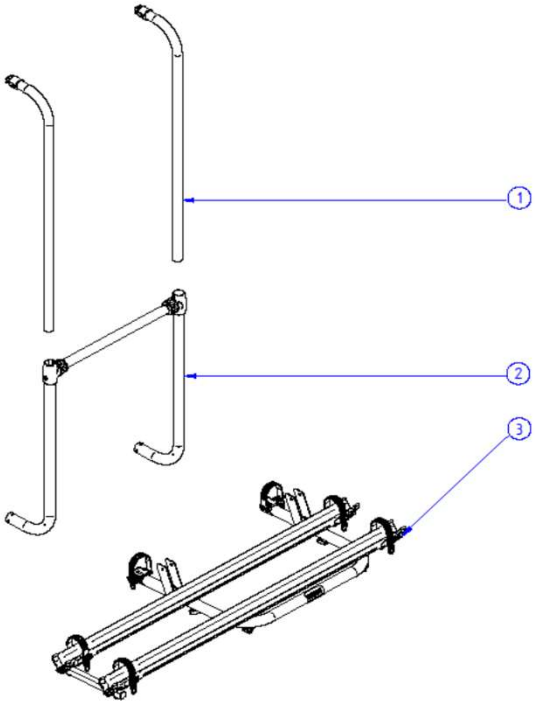

THULE Sport G2 Compact
SP620-01

	ART.NR.	DESCRIPTION	RETAIL € (ex.VAT)
1	1500602378	SPORT G2 LV ARM (1x)	42,80
2	1500602656	SPORT G2 2 DOORS BODY	65,60
3	1500603149	SPORT G2 COMPACT PLATFORM COMPLETE	126,80

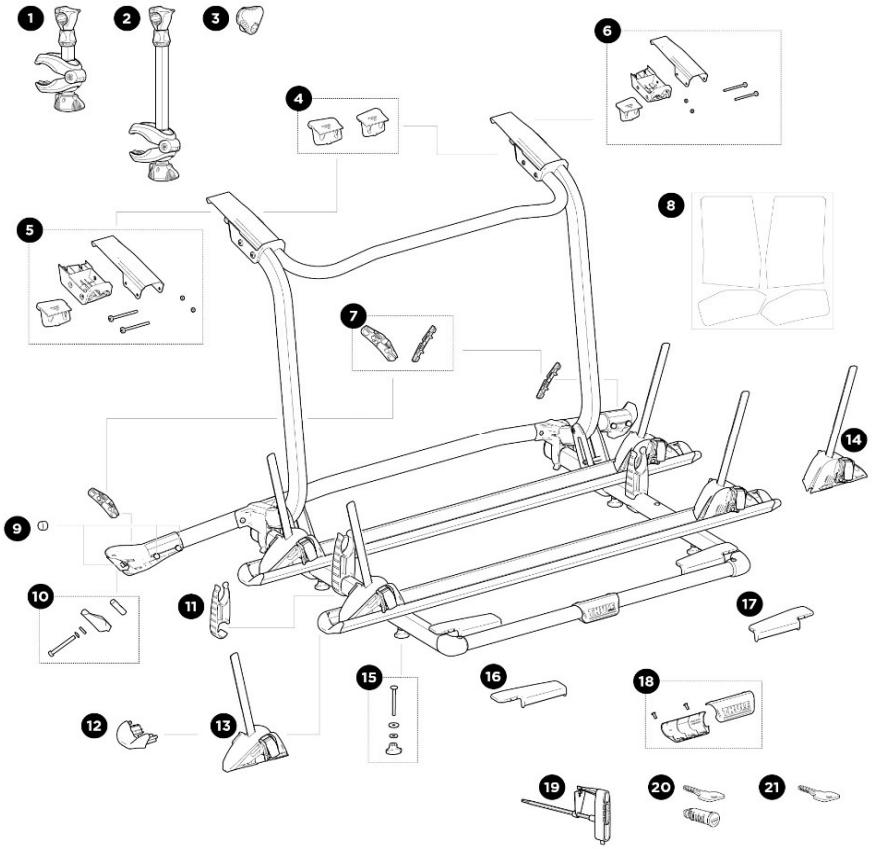

	ART.NR.	DESCRIPTION	RETAIL € (ex.VAT)
1	1500052415	BIKE ARM SHORT 122MM WITHOUT LOCK	On request
2	1500052973	BIKE ARM 482MM 30 TORQUE KNOB	On request
3	1500052738	BIKE ARM ACUTIGHT KNOB WITHOUT LOCK	On request
4	1500054291	FOOT PADS UPPER	On request
5	1500054296	UPPER FOOT COMPLETE LEFT	On request
6	1500054297	UPPER FOOT COMPLETE RIGHT	On request
7	1500054290	FOOT PADS LOWER	On request
8	1500054293	PLASTIC FOIL	On request
9	1500054311	CAP SOCKET SCREW	On request
10	1500054295	LOWER BRACKET	On request
11	1500054301	TILT LOCK	On request
12	1500054294	END CAP	On request
13	1500054300	WHEEL HOLDER COMPLETE LEFT	On request
14	1500054299	WHEEL HOLDER COMPLETE RIGHT	On request
15	1500054298	WING KNOB WITH FASTENERS	On request
16	1500054302	COVER PLATFORM LEFT	On request
17	1500054303	COVER PLATFORM RIGHT	On request
18	1500054304	LOGOTYPE	On request
19	1500054292	TORQUE KEY 6Nm	On request
	1500054819	COVER SIDE PROFILE - LEFT	On request
	1500054820	COVER SIDE PROFILE - RIGHT	On request

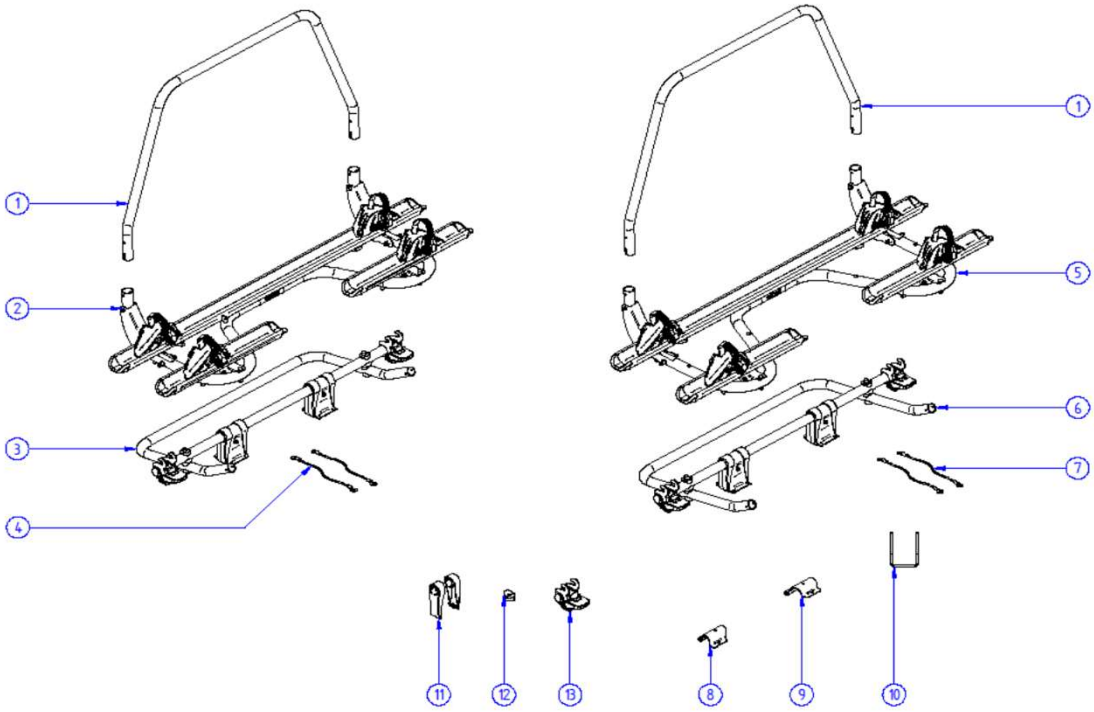

THULE caravan Superb XT / Superb SV XT SP623-01

	ART.NR.	DESCRIPTION	RETAIL € (ex.VAT)
		Caravan Superb XT SV	
1	1500603223	CARAVAN SUPERB XT SUPPORT BAR BLACK	48,90
2	1500603224	CARAVAN SUPERB XT SV PLATFORM COMPLETE BLACK	316,30
3	1500603225	CARAVAN SUPERB XT SV BASE BLACK	202,80
4	1500603487	CARAVAN SUPERB SV TILT STOP CORD - 450MM (2x)	19,80
11	1500602899	CARAVAN SUPERB XT FOOT COVER (2x)	5,60
12	1500602960	CARAVAN SUPERB XT FIXATION TILT STOP (2x)	5,30
13	1500602864	CARAVAN SUPERB XT PLATFORM LOCK SET V2 (2x)	103,60
		Caravan Superb XT	
1	1500603223	CARAVAN SUPERB XT SUPPORT BAR BLACK	48,90
5	1500603226	CARAVAN SUPERB XT PLATFORM COMPLETE BLACK	322,80
6	1500603227	CARAVAN SUPERB XT BASE BLACK	205,70
7	1500603488	CARAVAN SUPERB TILT STOP CORD - 550MM (2x)	21,20
11	1500602899	CARAVAN SUPERB XT FOOT COVER (2x)	5,60
12	1500602960	CARAVAN SUPERB XT FIXATION TILT STOP (2x)	5,30
13	1500602864	CARAVAN SUPERB XT PLATFORM LOCK SET V2 (2x)	103,60
		Common parts for all A-frames	
8	1500602774	FIXATION PLATE D30 RH BLACK	7,60
9	1500602773	FIXATION PLATE D30 LH BLACK	7,60
10	1500601980	U-BOLT M6 x 135/78/135 (1x)	4,80
	308140	U-BOLT M6 x 160/78/160 (4x) (sold per 5 sets)	See price list

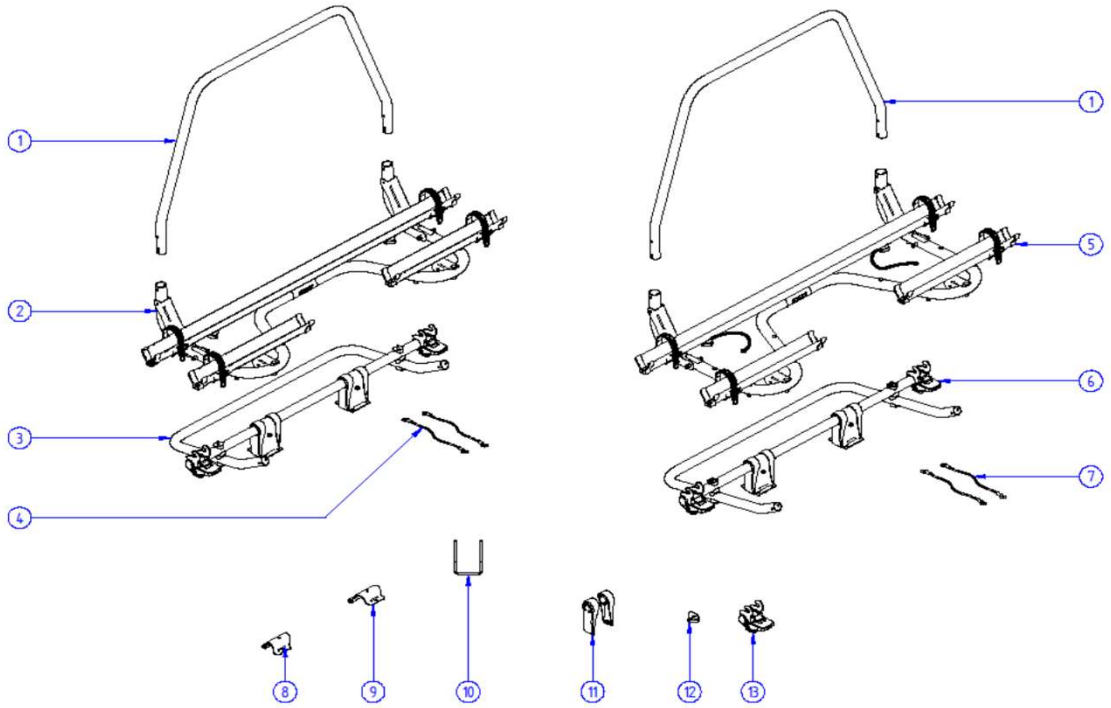

THULE Caravan Superb / Superb SV SP624-00

	ART.NR.	DESCRIPTION	RETAIL € (ex.VAT)
		Caravan Superb SV	
1	1500602768	CARAVAN SMART / SUPERB SUPPORT BAR	44,60
2	1500602808	CARAVAN SUPERB SV PLATFORM COMPLETE	274,20
	1500602987	CARAVAN SUPERB SV 2016 PLATFORM COMPLETE	274,20
3	1500602770	CARAVAN SUPERB SV BASE	189,20
	1500602988	CARAVAN SUPERB SV 2016 BASE	191,90
4	1500603487	CARAVAN SUPERB SV TILT STOP CORD - 450MM (2x)	19,80
11	1500602899	CARAVAN SMART/ SUPERB FOOT COVER (2X)	5,60
12	1500602960	CARAVAN SMART/SUPERB FIXATION TILT STOP (2x)	5,30
13	1500602864	CARAVAN SMART / SUPERB PLATFORM LOCK SET V2	103,60
		Caravan Superb	
1	1500602768	CARAVAN SMART / SUPERB SUPPORT BAR	44,60
5	1500602771	CARAVAN SUPERB PLATFORM COMPLETE	274,20
6	1500602772	CARAVAN SUPERB BASE	190,70
7	1500603488	CARAVAN SUPERB TILT STOP CORD - 550MM (2x)	21,20
11	1500602899	CARAVAN SMART/ SUPERB FOOT COVER (2X)	5,60
12	1500602960	CARAVAN SMART/SUPERB FIXATION TILT STOP (2x)	5,30
13	1500602864	CARAVAN SMART / SUPERB PLATFORM LOCK SET V2	103,60
		Common parts for all A-frames	
8	1500602774	FIXATION PLATE D30 RH BLACK	7,60
9	1500602773	FIXATION PLATE D30 LH BLACK	7,60
10	1500601980	U-BOLT M6 x 135/78/135 (1x)	4,80
	308140	U-BOLT M6 x 160/78/160 (4x) (sold per 5 sets)	See price list

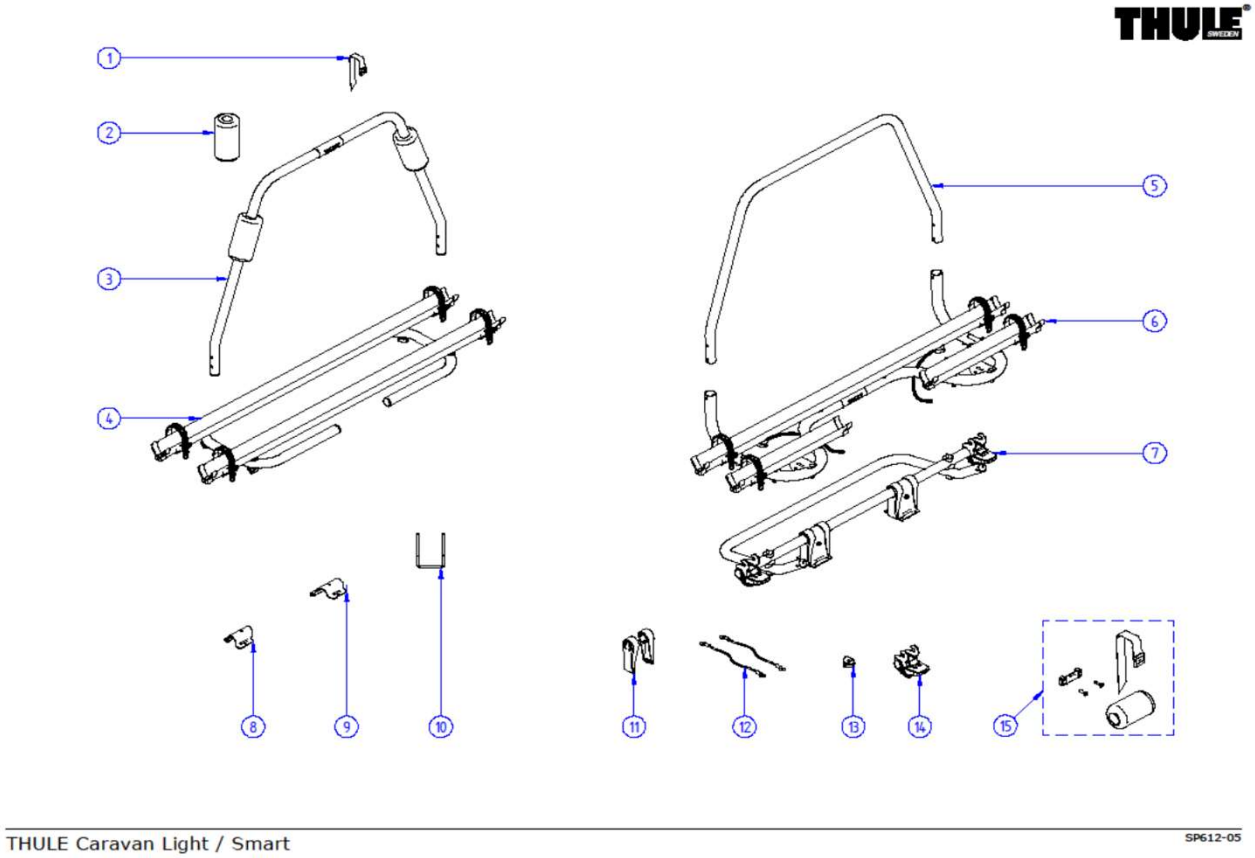

	ART.NR.	DESCRIPTION	RETAIL € (ex.VAT)
		Caravan Light	
1	306566	BRAKE STRAPS	See price list
2	1500602748	FOAM PADS 30x75x150mm (2 PCS)	17,70
3	1500602766	CARAVAN LIGHT SUPPORT BAR	61,20
4	1500602767	CARAVAN LIGHT PLATFORM COMPLETE	124,60
		Caravan Smart	
5	1500602768	CARAVAN SMART / SUPERB SUPPORT BAR	44,60
6	1500602769	CARAVAN SMART PLATFORM COMPLETE	217,10
7	1500602770	CARAVAN SMART BASE	189,20
11	1500602899	CARAVAN SMART/ SUPERB FOOT COVER (2X)	5,60
12	1500603486	CARAVAN SMART TILT STOP CORD - 350MM (2x)	17,20
13	1500602960	CARAVAN SMART/SUPERB FIXATION TILT STOP (2x)	5,30
14	1500602864	CARAVAN SMART / SUPERB PLATFORM LOCK SET V2	103,60
		Caravan Smart Eriba Touring	
5	1500603221	CARAVAN SMART ERIBA TOURING SUPPORT BAR	43,60
6	1500602769	CARAVAN SMART PLATFORM COMPLETE	217,10
7	1500602770	CARAVAN SMART BASE	189,20
11	1500602899	CARAVAN SMART/ SUPERB FOOT COVER (2X)	5,60
12	1500603486	CARAVAN SMART TILT STOP CORD - 350MM (2x)	17,20
13	1500602960	CARAVAN SMART/SUPERB FIXATION TILT STOP (2x)	5,30
14	1500602864	CARAVAN SMART / SUPERB PLATFORM LOCK SET V2	103,60
15	1500603222	BRACKET + STRAP + FOAM PAD	20,70
		Common parts for all A-frames	
8	1500602774	FIXATION PLATE D30 RH, BLACK	7,60
9	1500602773	FIXATION PLATE D30 LH, BLACK	7,60
10	1500601980	U-BOLT M6 x 135/78/135 (1pcs)	4,80
	308140	U-BOLTS XL M6 x 160/78/160 (4pcs) (sold per 5 sets)	See price list

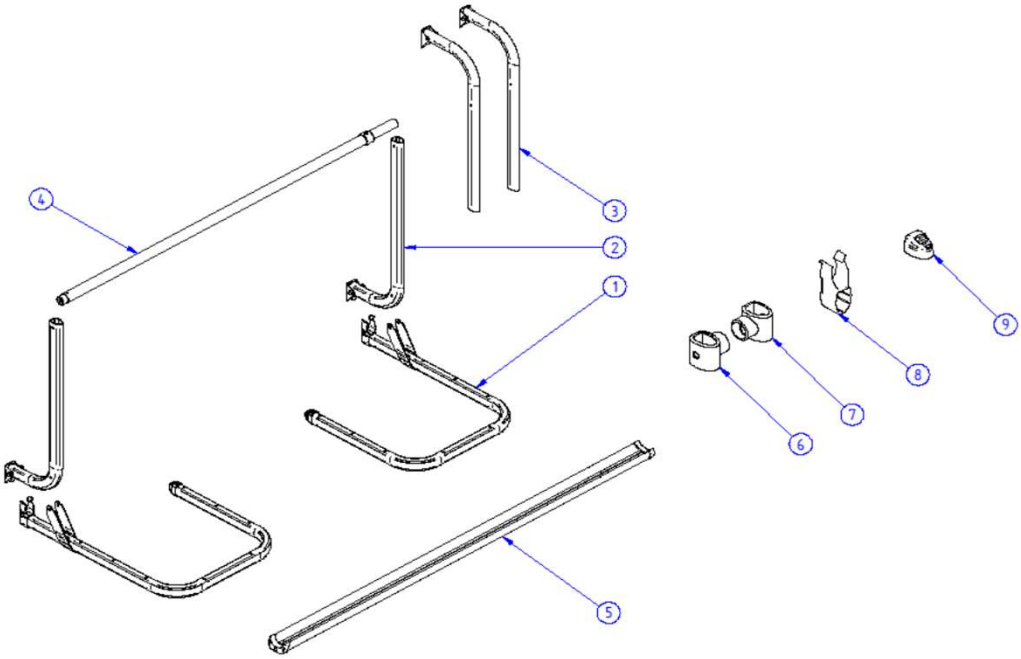

THULE Omnibike Elite Euracargo
OBM725-02

	ART.NR.	DESCRIPTION	RETAIL € (ex.VAT)
1	1500601710	ELITE EURA CARGO PLATFORM (2x)	Not available
2	1500600463	ELITE EURA CARGO BASEFRAME BASE (1x)	Not available
3	1500602176	ELITE EURA CARGO BASEARM (1x)	29,50
4	1500602177	ELITE EURA CARGO CROSSBAR	Not available
5	1500602371	ELITE EURA CARGO BIKERAIL 157cm	Not available
6	1500601994	T-PIECE LH	3,90
7	1500601995	T-PIECE RH	3,90
8	1500601992	ENDCAP PLATFORM	3,60
9	1500602041	OVAL PLUG GREY	1,80

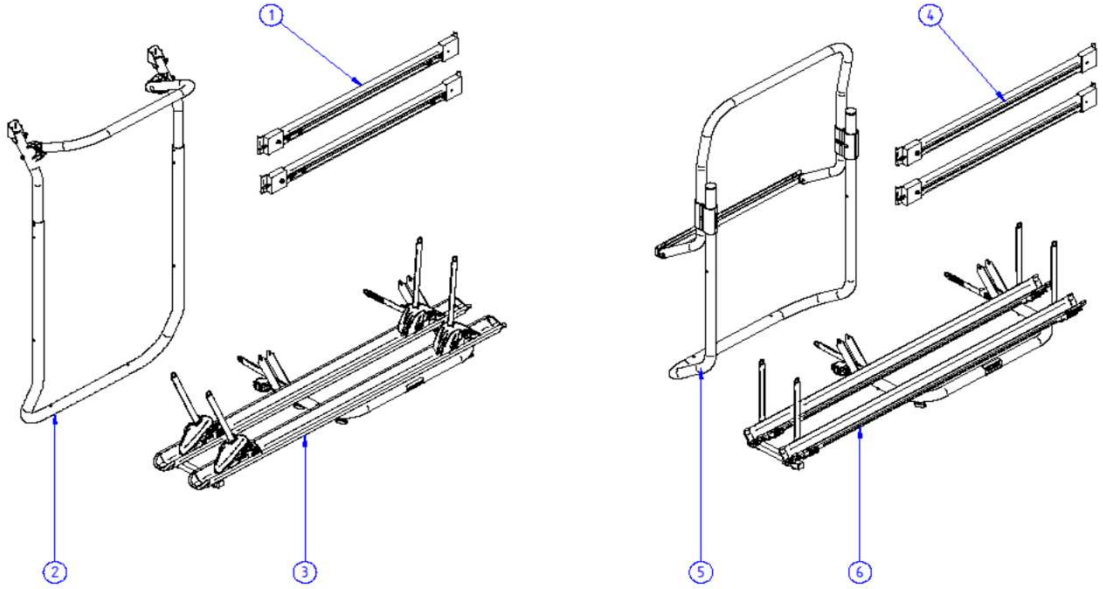

THULE Elite G2 van / Sport G2 van
MH606-00

	ART.NR.	DESCRIPTION	RETAIL € (ex.VAT)
1	1500602643	ADAPTION RAIL SET DUCATO SINCE 2007 (2 rails)	Not available
2	1500602644	ELITE G2 VAN BODY	Not available
2	1500603155	ELITE VAN XT BODY	144,00
3	1500602645	ELITE G2 VAN PLATFORM COMPLETE	Not available
4	1500602646	ADAPTION RAIL SET DUCATO BEFORE 2007 (2 rails)	Not available
5	1500602647	SPORT G2 VAN BODY	Not available
6	1500602648	SPORT G2 VAN PLAFORM COMPLETE	94,40

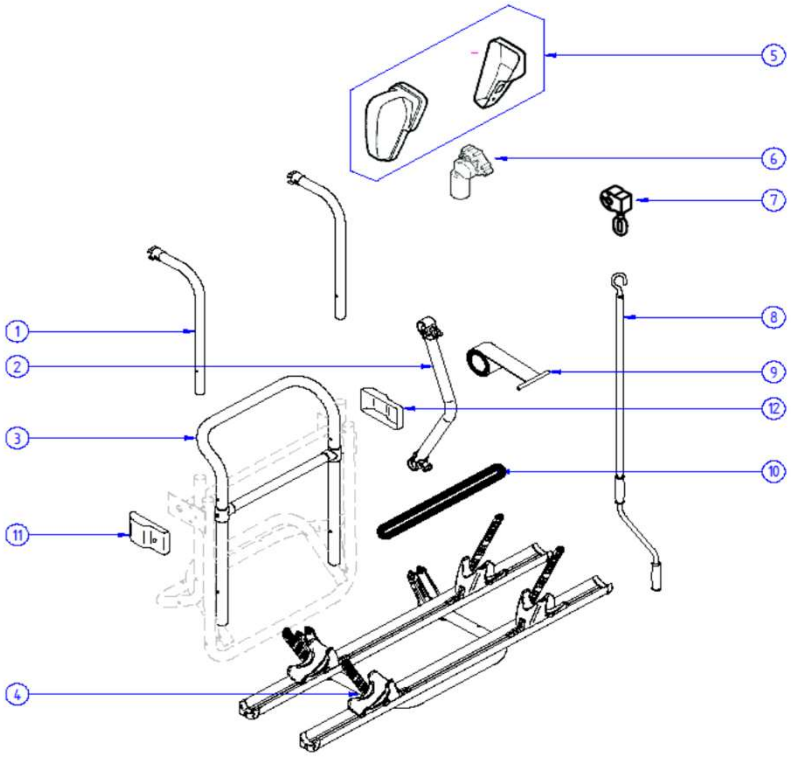

THULE Lift since 2010
OBL708-02

	ART.NR.	DESCRIPTION	RETAIL € (ex.VAT)
1		2x 1500603103 + 1x 1500602383	See Lift V16
2	1500602048	LIFT TIE TUBE	84,70
3	1500602106	LIFT SUPPORTING FRAME 481MM, SINCE 2010	Not available
	1500602108	LIFT SUPPORTING FRAME 511MM	Not available
4	1500602373	LIFT PLATFORM COMPLETE, SINCE 2010	Not available
5	1500600505	LIFT 12V MOTOR COVER WHITE - 2PCS	Not available
	1500603110	LIFT V16 12V MOTOR COVER RH BLACK - 2PCS	115,70
6	1500600504	LIFT 12V MOTOR	291,90
7	1500601972	LIFT MANUAL GEAR	36,10
8	1500601973	LIFT MANUAL HAND CRANK	Not available
9	1500600467	LIFT STRAP - 2PCS	13,40
10	1500602000	LIFT RUBBER ELASTIC	3,60
11	1500600506	LIFT SIDEPLATE COVER WHITE LH - MANUAL & 12V	Not available
	1500603106	LIFT V16 SIDEPLATE COVER BLACK LH - MANUAL & 12V	46,70
12	1500601746	LIFT SIDEPLATE COVER WHITE RH - MANUAL	Not available
	1500603107	LIFT V16 SIDEPLATE COVER BLACK RH - MANUAL	50,90
13	1500600436	ANGLE SUPPORT RAIL LIFT	11,10

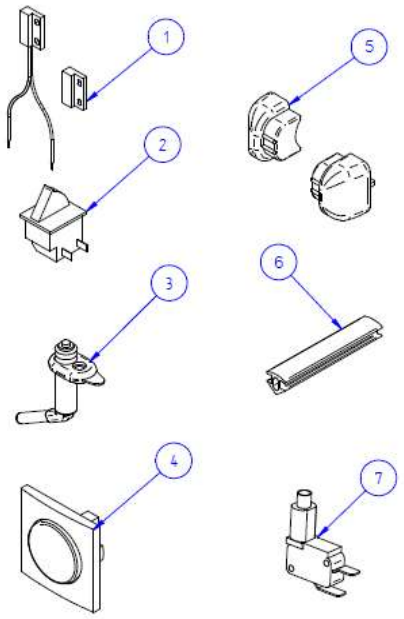

THULE general parts steps

OSE601-03

	ART.NR.	DESCRIPTION	RETAIL € (ex.VAT)
1	1500602761	DOOR REED SWITCH ELECTRONIC	7,10
2	1500601921	ALARM SWITCH FOR SINGLE STEP AND SLIDE-OUT STEP	13,90
3	1500600394	ALARM SWITCH FOR MANUAL STEP 47	16,20
4	1500600404	CONTROL SWITCH	17,20
5	1500601378	LH & RH PLUG FOOTBOARD BLACK - SINGLE AND DOUBLE STEP	8,10
	1500602747	LH & RH PLUG FOOTBOARD BLACK - SLIDE OUT STEP	8,10
6	1500600433	ANTI-SLIP FOOTB.V03-3MTR-BLACK	6,10
7	1500602669	ALARM SWITCH FOR DOUBLE STEP	15,10

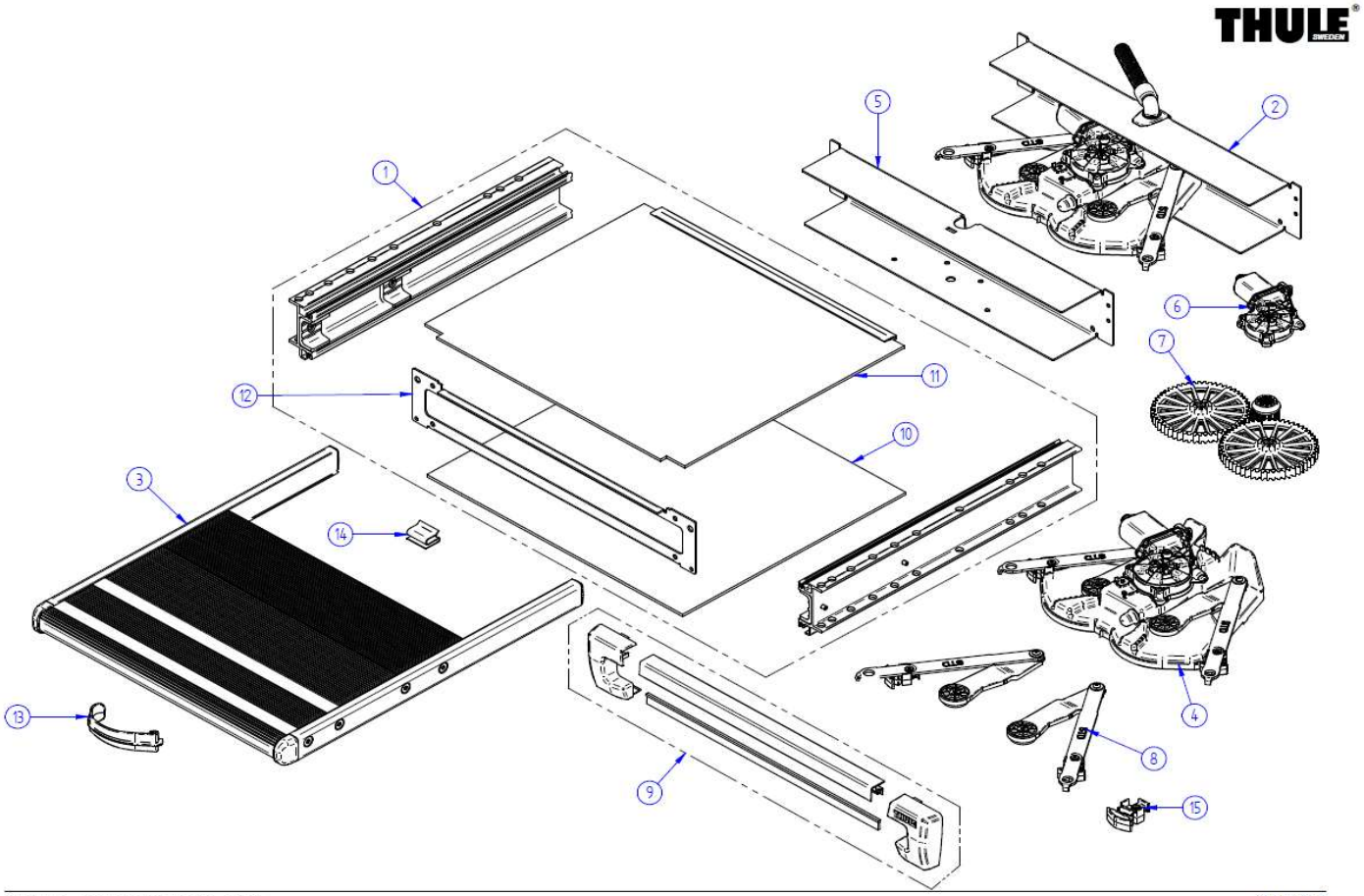

THULE SLIDE OUT G2 STD
SDD604-00

	ART.NR.	DESCRIPTION	RETAIL € (ex.VAT)
1	1500603631	FRAME SLO G2 STD 400	88,10
	1500603632	FRAME SLO G2 460 (*)	92,00
	1500603633	FRAME SLO G2 STD 550	95,10
	1500603634	FRAME SLO G2 STD 700	103,30
2	1500603635	MOTOR COMPLETE SLO G2 STD 400	187,30
	1500603636	MOTOR COMPLETE SLO G2 460 (*)	193,80
	1500603637	MOTOR COMPLETE SLO G2 STD 550	193,80
	1500603638	MOTOR COMPLETE SLO G2 STD 700	232,90
3	1500603639	FOOTBOARD COMPLETE SLO G2 STD 400	125,80
	1500603640	FOOTBOARD COMPLETE SLO G2 460 (*)	138,40
	1500603641	FOOTBOARD COMPLETE SLO G2 STD 550	151,00
	1500603642	FOOTBOARD COMPLETE SLO G2 STD 700	176,30
4	1500603643	MOTOR DRIVE UNIT SLO G2 STD	154,80
5	1500603720	MOTOR PLATE SLO G2 400	32,50
	1500603721	MOTOR PLATE SLO G2 460 (*)	39,00
	1500603722	MOTOR PLATE SLO G2 550	39,00
	1500603723	MOTOR PLATE SLO G2 700	78,10
6	1500603660	MOTOR SLO G2	90,80
7	1500603648	REPAIR KIT PINION SLO G2	25,30
8	1500603649	DRIVING ARMS SLO G2 STD	13,20
9	1500603644	FRONT PROTECTION SLO G2 STD 400	25,30
	1500603645	FRONT PROTECTION SLO G2 460 (*)	27,80
	1500603646	FRONT PROTECTION SLO G2 STD 550	30,40
	1500603647	FRONT PROTECTION SLO G2 STD 700	35,40
10	1500603650	LOWER PROTECTION SLO G2 STD 400	29,30
	1500603651	LOWER PROTECTION SLO G2 460 (*)	32,30
	1500603652	LOWER PROTECTION SLO G2 STD 550	30,50
	1500603653	LOWER PROTECTION SLO G2 STD 700	35,30
11	1500603654	UPPER PROTECTION SLO G2 STD 400 + H PROFILE	27,80

	1500603655	UPPER PROTECTION SLO G2 460 + H PROFILE (*)	30,30
	1500603656	UPPER PROTECTION SLO G2 STD 550 + H PROFILE	32,80
	1500603657	UPPER PROTECTION SLO G2 STD 700 + H PROFILE	35,30
12	1500603242	FRONT PLATE SLO 400	20,20
	1500603398	FRONT PLATE SLO 460 (*)	21,40
	1500603232	FRONT PLATE SLO 550	22,70
	1500603243	FRONT PLATE SLO 700	25,20
13	1500603404	SAFETY HOOK FOOTBOARD SLO	6,20
14	1500602752	FIXATION SPRING PROTECTION COVER - 6PCS	11,90
15	1500603726	END STOP FOOTBOARD SLO G2	15,70
	(*)	460 = Special Step : Carthago	

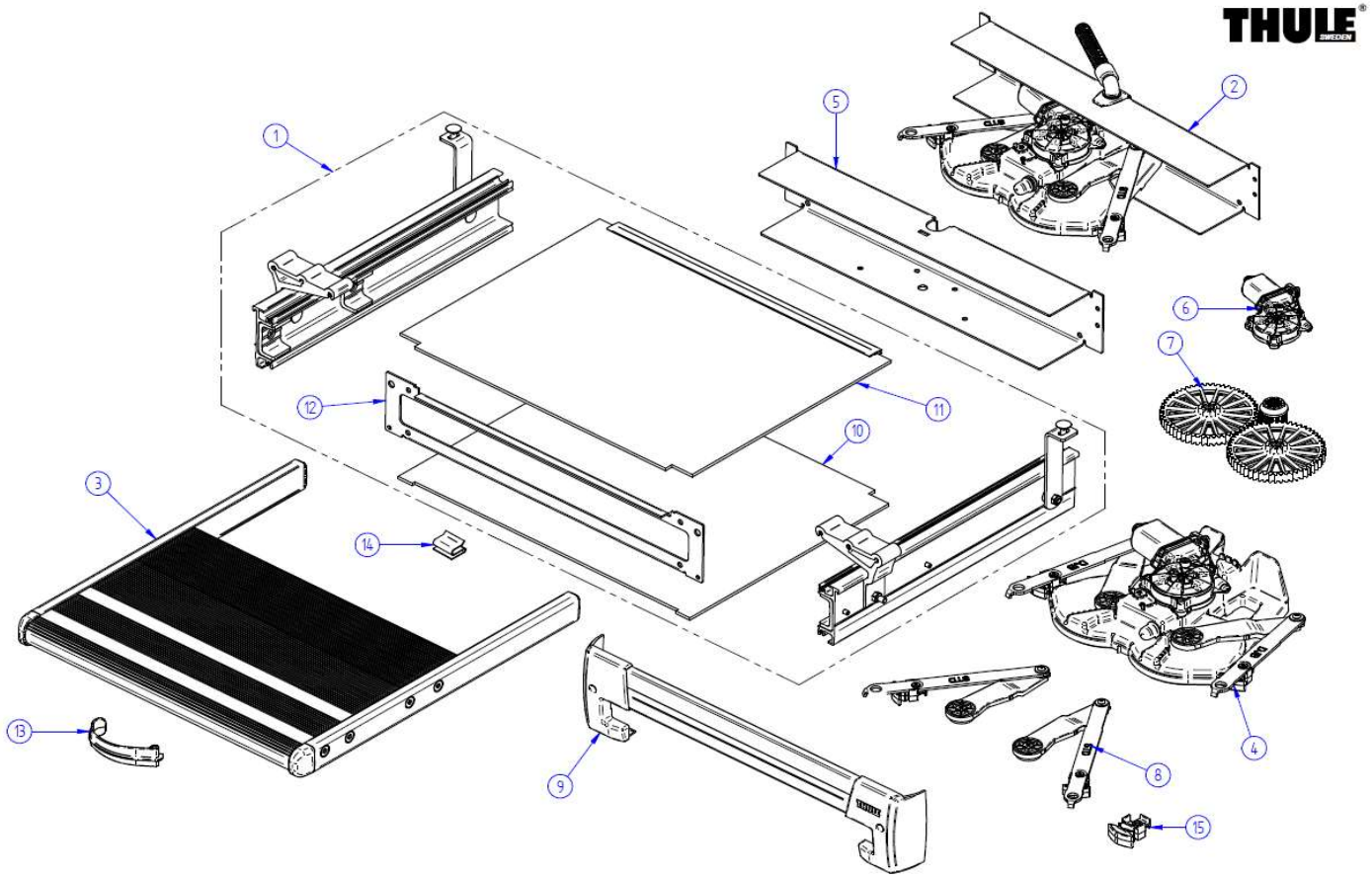

THULE SLIDE OUT G2 Dujubo SDD603-00

	ART.NR.	DESCRIPTION	RETAIL € (ex.VAT)
1	1500603683	FRAME SLO G2 DJB 400	88,10
	1500603684	FRAME SLO G2 DJB 550	95,80
	1500603685	FRAME SLO G2 DJB 700	103,30
2	1500603689	MOTOR COMPLETE SLO G2 DJB 400	187,30
	1500603690	MOTOR COMPLETE SLO G2 DJB 550	193,80
	1500603691	MOTOR COMPLETE SLO G2 DJB 700	232,90
3	1500603695	FOOTBOARD COMPLETE SLO G2 DJB 400	125,80
	1500603696	FOOTBOARD COMPLETE SLO G2 DJB 550	151,00
	1500603697	FOOTBOARD COMPLETE SLO G2 DJB 700	176,30
4	1500603701	MOTOR DRIVE UNIT SLO G2 DJB G2	154,80
5	1500603720	MOTOR PLATE SLO G2 400	32,50
	1500603722	MOTOR PLATE SLO G2 550	39,00
	1500603723	MOTOR PLATE SLO G2 700	78,10
6	1500603660	MOTOR SO G2	90,80
7	1500603648	REPAIR KIT PINION SLO G2	25,30
8	1500603706	DRIVING ARMS SLO G2 DJB G2	13,20
9	1500603703	FRONT PROTECTION SLO G2 DJB/CFT 400	25,30
	1500603704	FRONT PROTECTION SLO G2 DJB/CFT 550	30,40
	1500603705	FRONT PROTECTION SLO G2 DJB/CFT 700	35,40
10	1500603708	LOWER PROTECTION SLO G2 DJB 400	29,30
	1500603709	LOWER PROTECTION SLO G2 DJB 550	30,50
	1500603710	LOWER PROTECTION SLO G2 DJB 700	35,30
11	1500603714	UPPER PROTECTION SLO G2 DJB 400 + H PROFILE	30,00
	1500603715	UPPER PROTECTION SLO G2 DJB 550 + H PROFILE	31,20
	1500603716	UPPER PROTECTION SLO G2 DJB 700 + H PROFILE	32,80
12	1500603242	FRONT PLATE SLO 400	20,20
	1500603232	FRONT PLATE SLO 550	22,70
	1500603243	FRONT PLATE SLO 700	25,20
13	1500603404	SAFETY HOOK FOOTBOARD SLO	6,20

14	1500602752	FIXATION SPRING PROTECTION COVER - 6PCS	11,90
15	1500603726	END STOP FOOTBOARD SLO G2	15,70

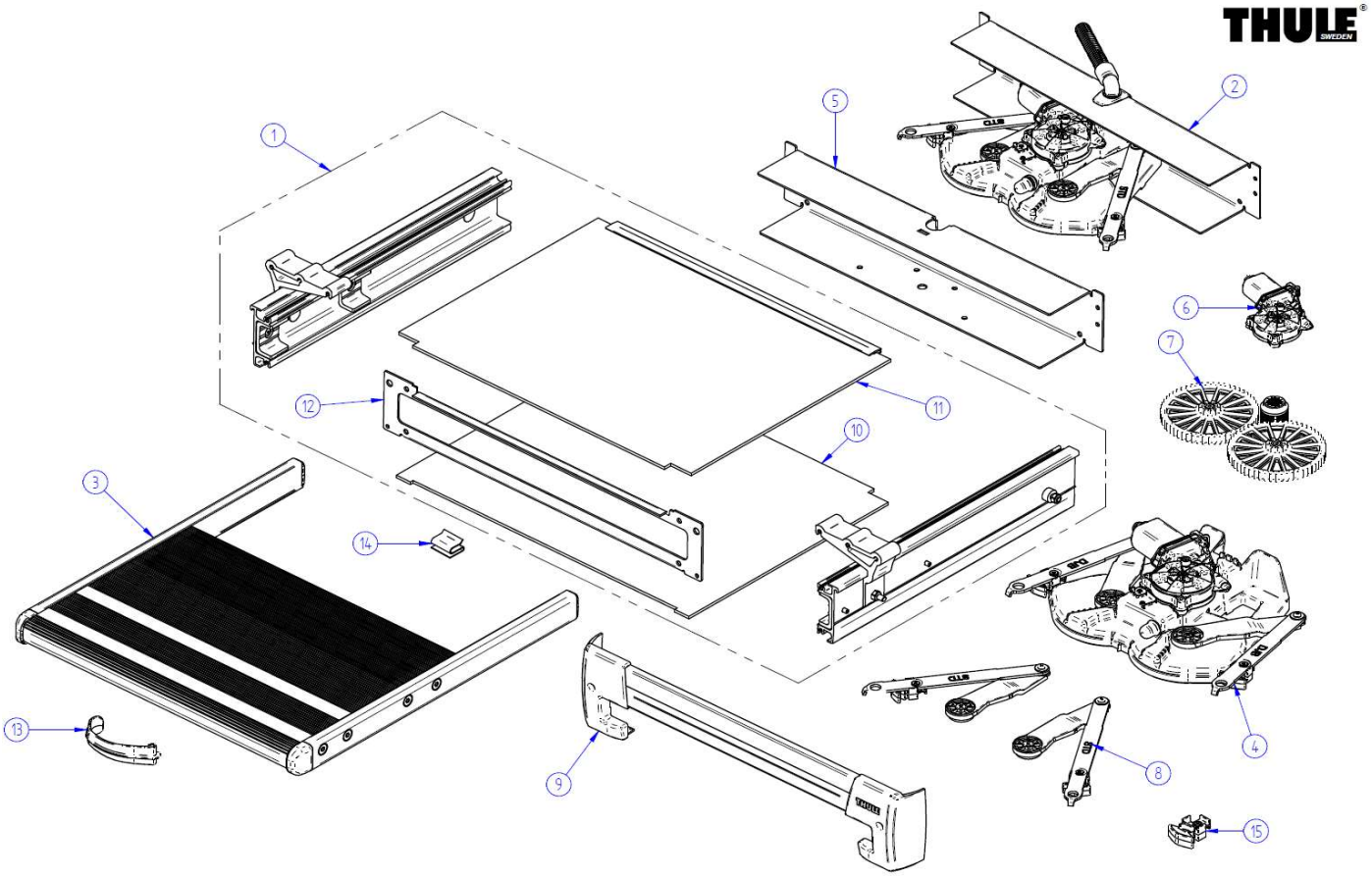

THULE SLIDE OUT G2 Crafter
SDD605-00

	ART.NR.	DESCRIPTION	RETAIL € (ex.VAT)
1	1500603686	FRAME SLO G2 CFT 400	88,10
	1500603687	FRAME SLO G2 CFT 550	95,80
	1500603688	FRAME SLO G2 CFT 700	103,30
2	1500603692	MOTOR COMPLETE SLO G2 CFT 400	187,30
	1500603693	MOTOR COMPLETE SLO G2 CFT 550	193,80
	1500603694	MOTOR COMPLETE SLO G2 CFT 700	232,90
3	1500603698	FOOTBOARD COMPLETE SLO G2 CFT 400	125,80
	1500603699	FOOTBOARD COMPLETE SLO G2 CFT 550	151,00
	1500603700	FOOTBOARD COMPLETE SLO G2 CFT 700	176,30
4	1500603702	MOTOR DRIVE UNIT SLO G2 CFT G2	154,80
5	1500603720	MOTOR PLATE SLO G2 400	32,50
	1500603722	MOTOR PLATE SLO G2 550	39,00
	1500603723	MOTOR PLATE SLO G2 700	78,10
6	1500603660	MOTOR SO G2	90,80
7	1500603648	REPAIR KIT PINION SLO G2	25,30
8	1500603707	DRIVING ARMS SLO G2 CFT G2	13,20
9	1500603703	FRONT PROTECTION SLO G2 DJB/CFT 400	25,30
	1500603704	FRONT PROTECTION SLO G2 DJB/CFT 550	30,40
	1500603705	FRONT PROTECTION SLO G2 DJB/CFT 700	35,40
10	1500603711	LOWER PROTECTION SLO G2 CFT 400	29,30
	1500603712	LOWER PROTECTION SLO G2 CFT 550	30,50
	1500603713	LOWER PROTECTION SLO G2 CFT 700	35,30
11	1500603717	UPPER PROTECTION SLO G2 CFT 400 + H PROFILE	30,00
	1500603718	UPPER PROTECTION SLO G2 CFT 550 + H PROFILE	31,20
	1500603719	UPPER PROTECTION SLO G2 CFT 700 + H PROFILE	32,80
12	1500603242	FRONT PLATE SLO 400	20,20
	1500603232	FRONT PLATE SLO 550	22,70
	1500603243	FRONT PLATE SLO 700	25,20
13	1500603404	SAFETY HOOK FOOTBOARD SLO	6,20

14	1500602752	FIXATION SPRING PROTECTION COVER - 6PCS	11,90
15	1500603726	END STOP FOOTBOARD SLO G2	15,70

2024 SPARE PARTS LIST

Slide-Out Step G2 550 - Crafter 4WD

SDD603

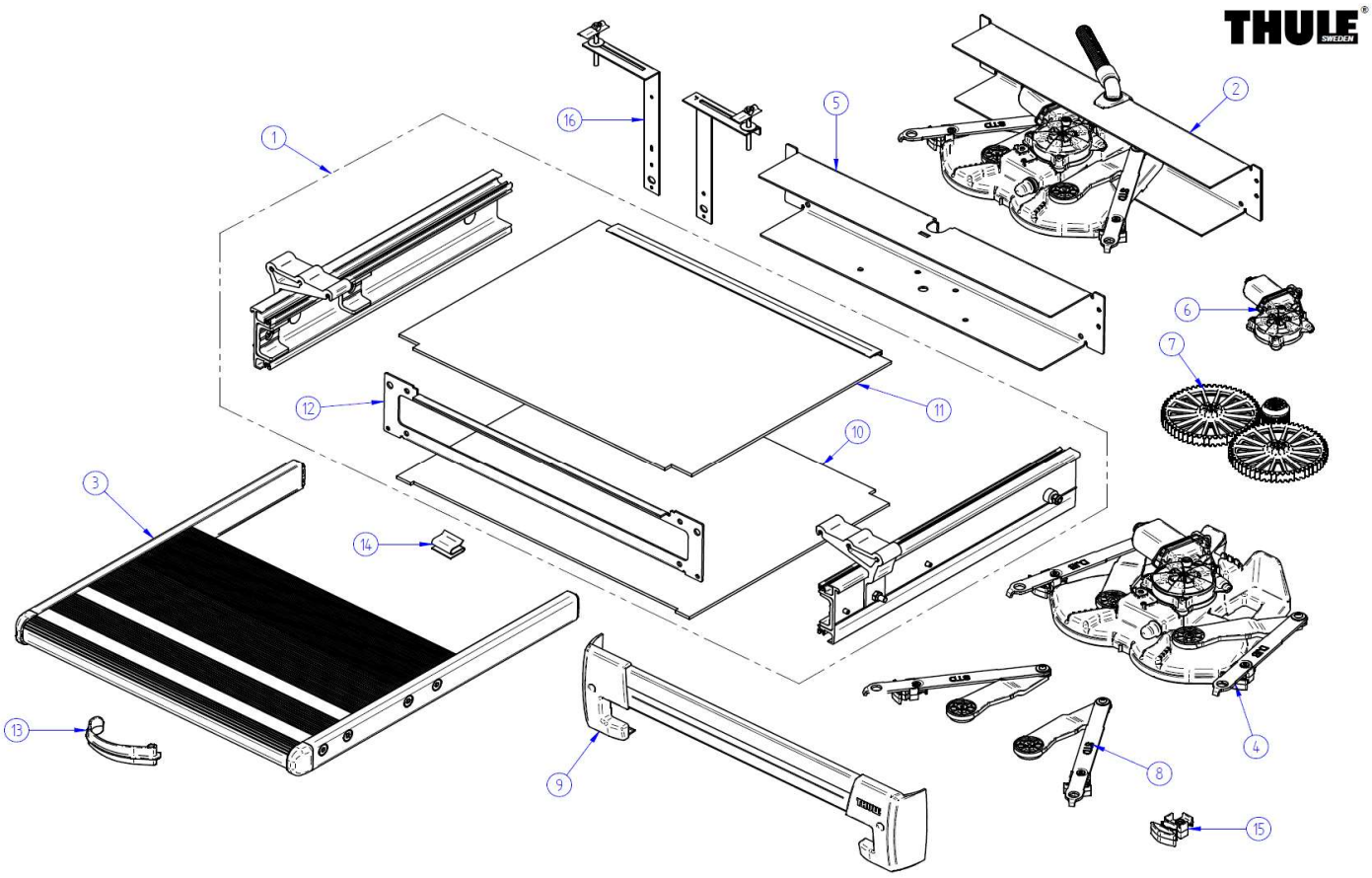

THULE SLIDE OUT G2 550 - Crafter 4WD

SDD606-00

	ART.NR.	DESCRIPTION	RETAIL € (ex.VAT)
1	1500603687	FRAME SLO G2 CFT 550	95,80
2	1500603693	MOTOR COMPLETE SLO G2 CFT 550	193,80
3	1500603699	FOOTBOARD COMPLETE SLO G2 CFT 550	151,00
4	1500603702	MOTOR DRIVE UNIT SLO G2 CFT G2	154,80
5	1500603722	MOTOR PLATE SLO G2 550	39,00
6	1500603660	MOTOR SO G2	90,80
7	1500603648	REPAIR KIT PINION SLO G2	25,30
8	1500603707	DRIVING ARMS SLO G2 CFT G2	13,20
9	1500603704	FRONT PROTECTION SLO G2 DJB/CFT 550	30,40
10	1500603712	LOWER PROTECTION SLO G2 CFT 550	30,50
11	1500603718	UPPER PROTECTION SLO G2 CFT 550 + H PROFILE	31,20
12	1500603232	FRONT PLATE SLO 550	22,70
13	1500603404	SAFETY HOOK FOOTBOARD SLO	6,20
14	1500602752	FIXATION SPRING PROTECTION COVER - 6PCS	11,90
16	1500603726	END STOP FOOTBOARD SLO G2	15,70
15	1500603233	MOUNTING BRACKETS + TOGGLE BOLTS FOR CRAFTER 4WD	39,10

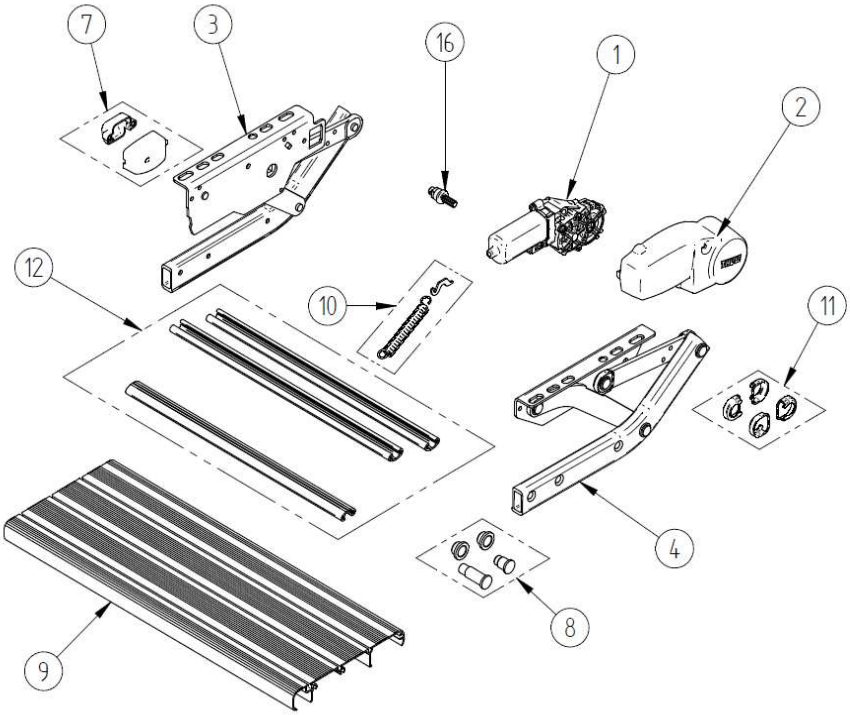

THULE Single step V15 12V & Manual

OSE600-02

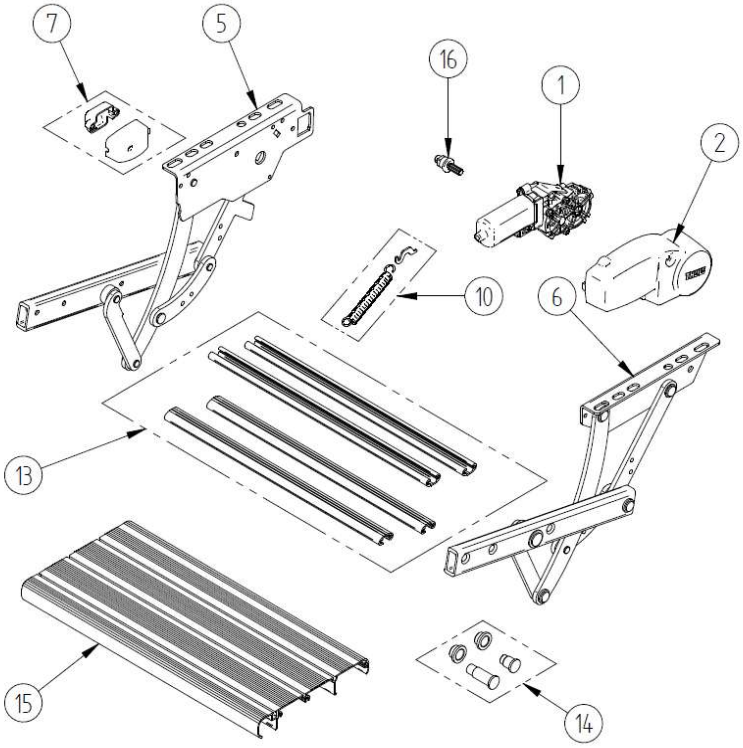

THULE Single step V15 12V460 Short

OSE602-02

2024 SPARE PARTS LIST

Single Step V10, V15 & Compact SE600 / OSE602

	ART.NR.	DESCRIPTION	RETAIL € (ex.VAT)
1	1500602970	12V MOTOR WITH SHAFT THULE STEP V15	129,20
2	1500602264	MOTOR COVER THULE STEP V10	15,70
3	1500602265	LH SIDE ASSY THULE STEP V10	83,50
	1500603661	LH SIDE ASSY SINGLE STEP COMPACT	83,50
4	1500602266	RH SIDE ASSY THULE STEP V10	83,50
	1500603662	RH SIDE ASSY SINGLE STEP COMPACT	83,50
5	1500602267	LH SIDE ASSY THULE STEP V10 SHORT	113,00
6	1500602268	RH SIDE ASSY THULE STEP V10 SHORT	113,00
7	1500602272	SWITCH PROTECTION COVER V10 (2PCS)	15,70
8	1500602273	REPAIR KIT RIVET THULE STEP V10	15,70
9	308251	FOOT BOARD SINGLE STEP 12V460	48,60
	1500602271	FOOT BOARD SINGLE STEP 12V520	51,90
	308253	FOOT BOARD SINGLE STEP 12V550 – MANUAL 550	51,90
	1500603663	FOOT BOARD SINGLE STEP COMPACT 12V500	51,90
10	1500602274	SPRING ASSY THULE STEP V10 (2PCS)	15,70
11	1500602971	SHOCK ABSORBER THULE STEP V15 - 4PCS	9,70
12	1500602276	CON.PROFILES THULE STEP 460 V10 (3PCS)	23,00
	1500602277	CON. PROFILES THULE STEP 520 V10 (3PCS)	23,00
	1500602278	CON. PROFILES THULE STEP 550 V10 (3PCS)	25,20
	1500603664	CON. PROFILES THULE STEP COMPACT 500 (3PCS)	25,20
13	1500602279	CON PROFILES THULE STEP 460 V10 SHORT (4PCS)	30,70
	1500602956	CON PROFILES THULE STEP 630 V10 SHORT (4PCS)	38,10
14	1500602269	REPAIR KIT RIVET THULE STEP V10 SHORT	20,00
15	1500602270	FOOT BOARD 12V460 SHORT V10	48,60
	1500602957	FOOT BOARD 12V630 SHORT V10	63,50
16	1500603114	MOTOR SHAFT AND BUSHING V15	18,60

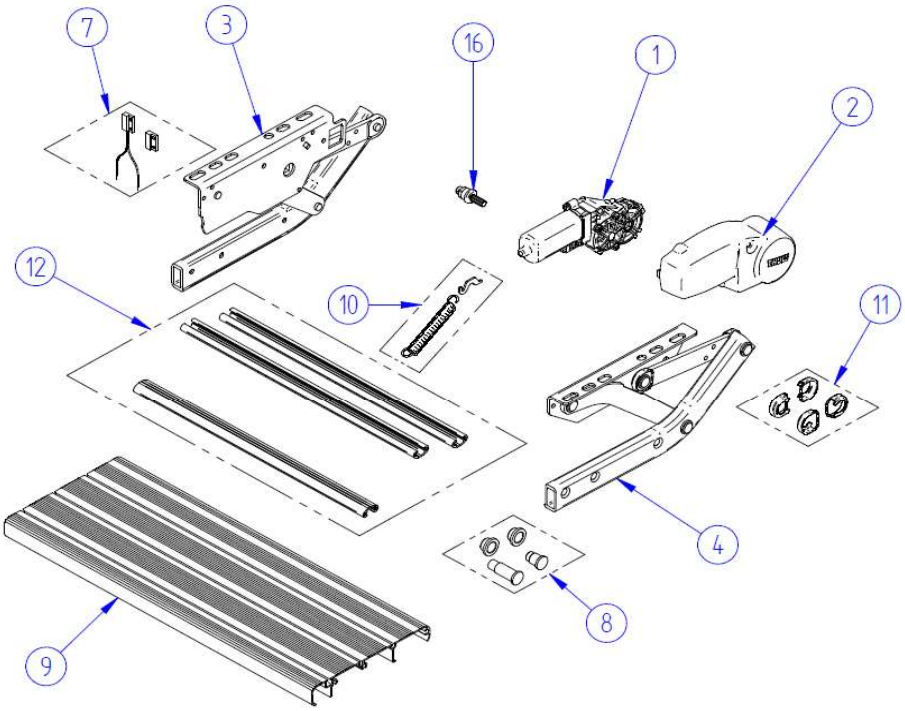

THULE Single step V15 12V Hymer
OSE603-00

	ART.NR.	DESCRIPTION	RETAIL € (ex.VAT)
1	1500602970	12V MOTOR WITH SHAFT THULE STEP V15	129,20
2	1500602264	MOTOR COVER THULE STEP V10	15,70
3	1500603167	LH SIDE ASSY THULE STEP V15 Hymer	Not available
4	1500603168	RH SIDE ASSY THULE STEP V15 Hymer	Not available
7	1500602761	DOOR REED SWITCH ELECTRONIC	7,10
8	1500602273	REPAIR KIT RIVET THULE STEP V10	15,70
9	1500603169	FOOT BOARD SINGLE STEP 600 Hymer	63,50
	1500603170	FOOT BOARD SINGLE STEP 700 Hymer	Not available
10	1500602274	SPRING ASSY THULE STEP V10 (2PCS)	15,70
11	1500602971	SHOCK ABSORBER THULE STEP V15 - 4PCS	9,70
12	1500603171	CON.PROFILES THULE STEP 600 Hymer (3PCS)	Not available
	1500603172	CON.PROFILES THULE STEP 700 Hymer (3PCS)	Not available
16	1500603114	MOTOR SHAFT AND BUSHING V15	18,60

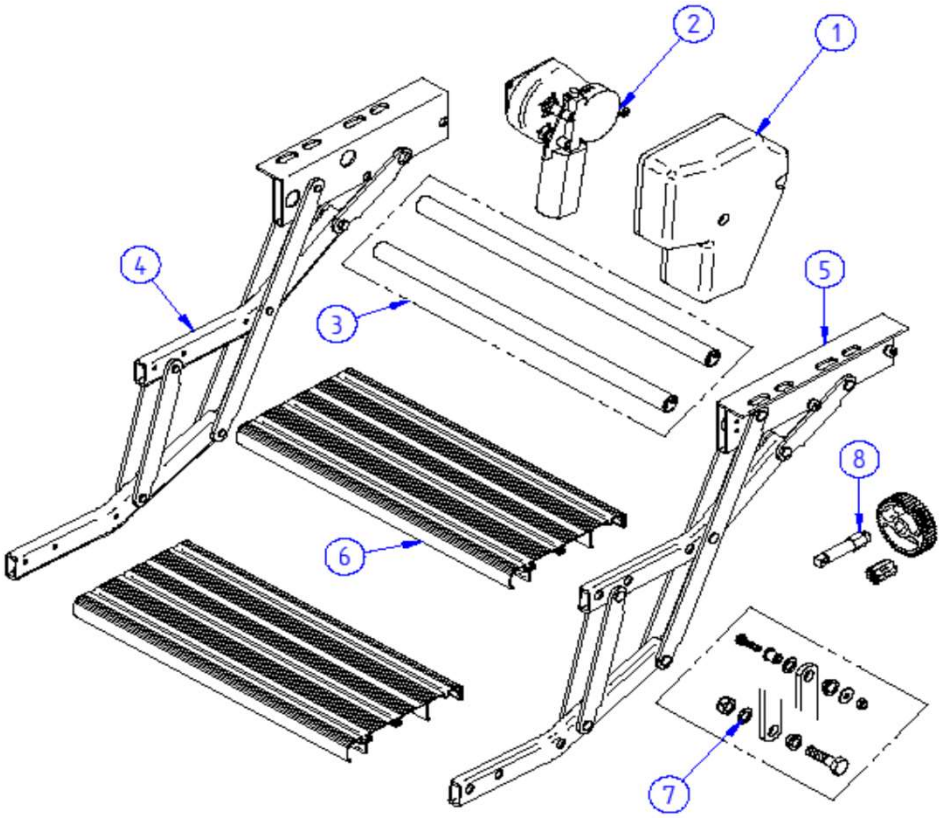

THULE Double step 12V ALU DDS605-00

	ART.NR.	DESCRIPTION	RETAIL € (ex.VAT)
1	1500600410	MOTOR CAP DOUBLE STEP (2PCS)	72,80
2	1500600416	12V MOTOR ASSY DOUBLE STEP	176,90
3	1500601928	FRAME CON. TUBE D12V380 – 2PC	17,20
	1500600417	FRAME CON. TUBE D12V440 – 2PC	17,20
	1500601432	FRAME CON. TUBE D12V500 – 2PC	17,20
	1500602280	FRAME CON. TUBE D12V550 – 2PC	18,60
4	1500600418	LH SCISSOR ASSY DOUBLE STEP	151,00
	1500603173	LH SCISSOR ASSY DOUBLE STEP 12V550 HYMER	151,00
5	1500600419	RH SCISSOR ASSY DOUBLE STEP	151,00
	1500603174	RH SCISSOR ASSY DOUBLE STEP 12V550 HYMER	151,00
6	308249	FOOT BOARD DOUBLE STEP12V380 – 2PC	96,80
	308250	FOOT BOARD DOUBLE STEP12V440 – 2PC	96,80
	308252	FOOT BOARD DOUBLE STEP12V500 – 2PC	102,60
	1500602281	FOOT BOARD DOUBLE STEP12V550 – 2PC	102,60
7	1500601154	REPAIR KIT RIVET DOUBLE STEP	20,00
8	1500602282	REPAIR KIT PINION DOUBLE STEP	43,10

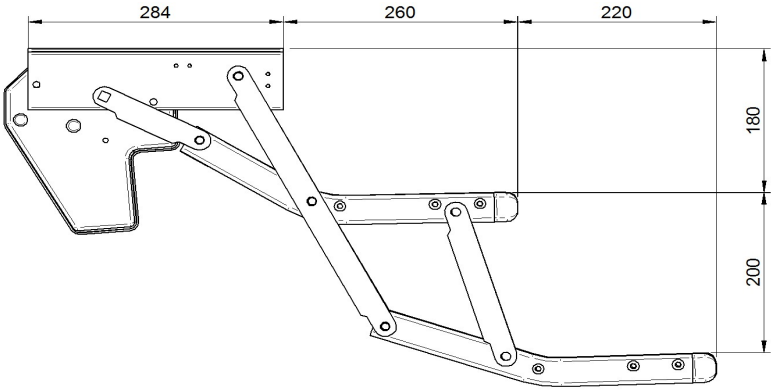

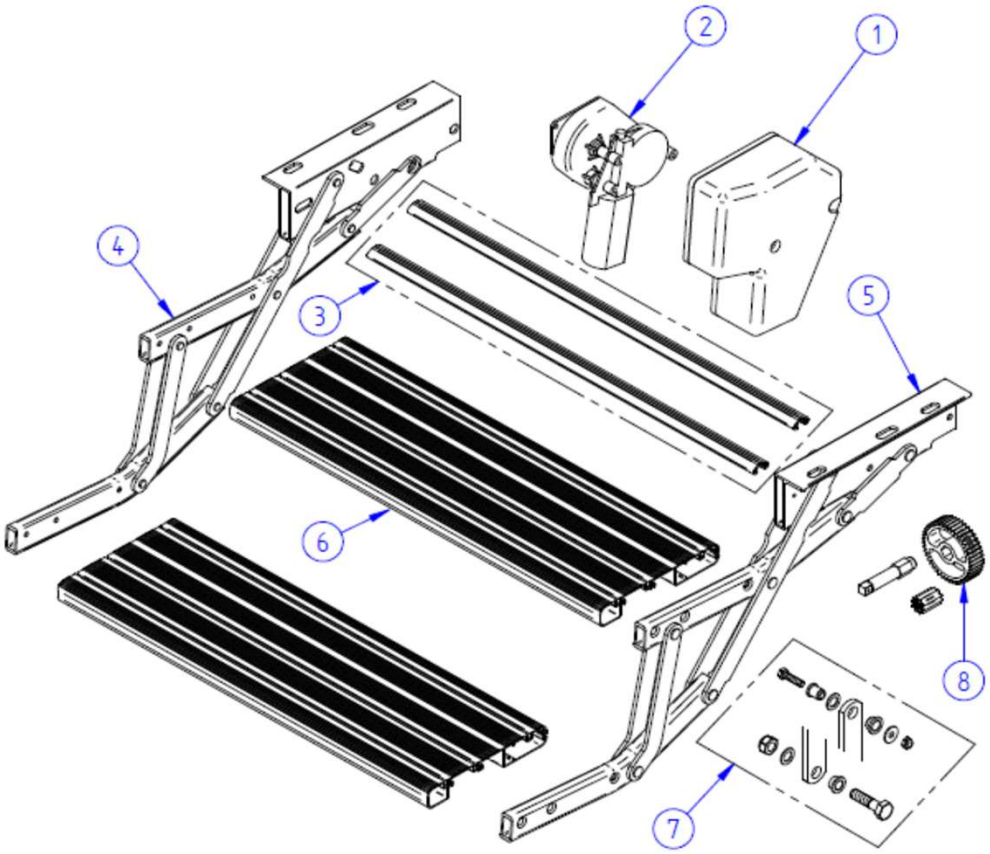

THULE Double step 12V 650 DSH603-00

	ART.NR.	DESCRIPTION	RETAIL € (ex.VAT)
1	1500602675	MOTOR CAP DOUBLE STEP 12V650 (2PCS)	72,80
2	1500602676	12V MOTOR ASSY DOUBLE STEP 12V650	176,90
3	1500602798	FRAME CON. TUBE D12V553 – 2PC	18,60
	1500602677	FRAME CON. TUBE D12V650 – 2PC	21,40
4	1500602678	LH SCISSOR ASSY DOUBLE STEP 12V650	154,90
5	1500602679	RH SCISSOR ASSY DOUBLE STEP 12V650	154,90
6	1500602799	FOOT BOARD DOUBLE STEP12V553 - 2PC	102,60
	1500602680	FOOT BOARD DOUBLE STEP12V650 – 2PC	115,40
7	1500601154	REPAIR KIT RIVET DOUBLE STEP	20,00
8	1500602282	REPAIR KIT PINION DOUBLE STEP	43,10

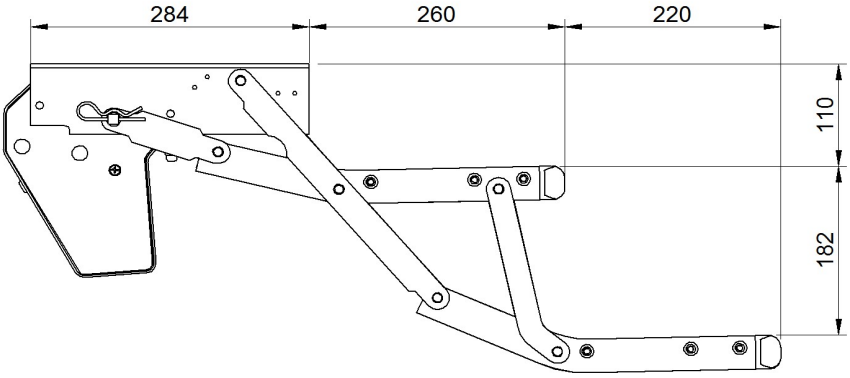

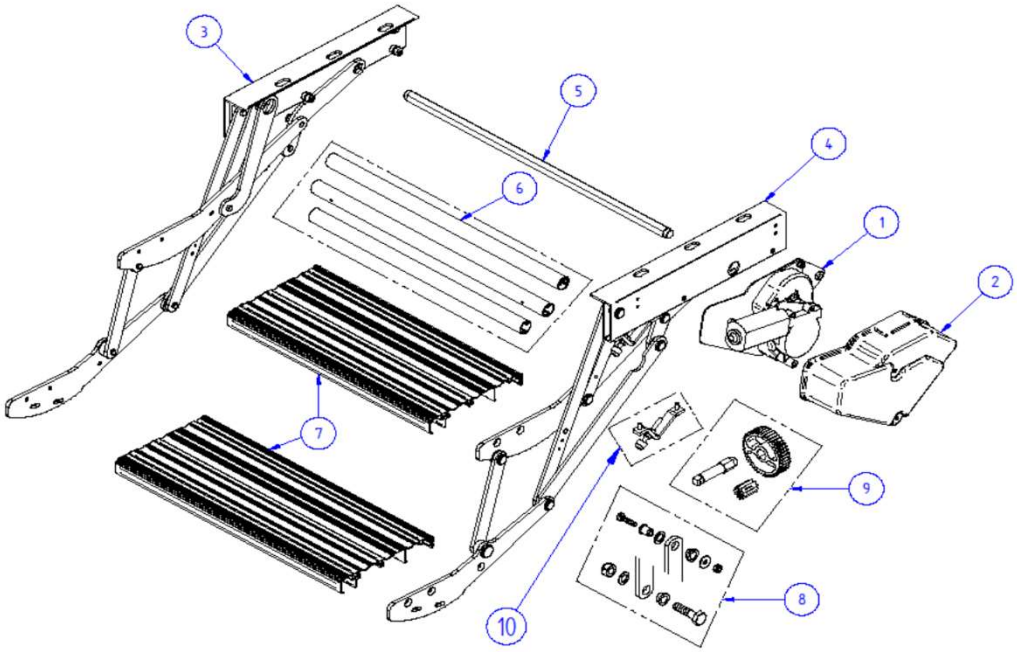

THULE Double step 12V650 Niesmann, 12V500 Dethleffs, 12V500 MJ03 Iveco & 12V500 Carthago

SMA605-01

	ART.NR.	DESCRIPTION	RETAIL € (ex.VAT)
1	1500602707	12V MOTOR ASSY DOUBLE STEP SKIRT	187,10
2	1500602708	MOTOR CAP DOUBLE STEP SKIRT	55,20
3	1500602709	LH SCISSOR ASSY DOUBLE STEP SKIRT	217,80
4	1500602710	RH SCISSOR ASSY DOUBLE STEP SKIRT	217,80
5	1500602711	DRIVING ROD D12V500 SKIRT	77,70
	1500602712	DRIVING ROD D12V650 SKIRT	83,50
6	1500602713	FRAME CON. TUBE D12V500 SKIRT – 3PC	25,50
	1500602714	FRAME CON. TUBE D12V650 SKIRT – 3PC	32,10
7	1500602715	FOOT BOARD DOUBLE STEP12V500 SKIRT – 2PC	102,60
	1500602716	FOOT BOARD DOUBLE STEP12V650 SKIRT – 2PC	115,40
8	1500602717	REPAIR KIT RIVET DOUBLE STEP SKIRT	20,00
9	1500602718	REPAIR KIT PINION DOUBLE STEP SKIRT	43,10
10	1500602793	LH+RH END STOP DOUBLE STEP SKIRT	42,60

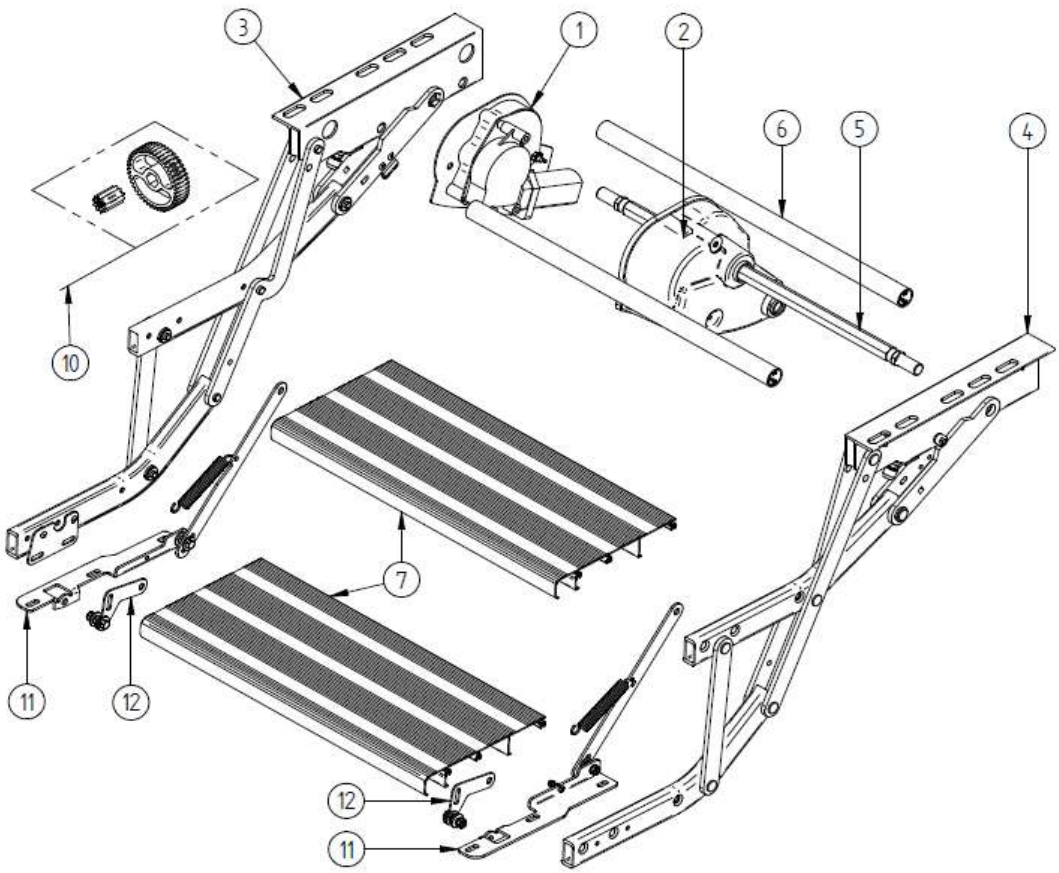

THULE Double step 12V500 Arto & 12V650 Flair SMB601-03

	ART.NR.	DESCRIPTION	RETAIL € (ex.VAT)
1	1500602886	12V MOTOR ASSY DOUBLE STEP SKIRT 2015	194,10
2	1500602887	MOTOR CAP DOUBLE STEP SKIRT 2015	55,20
3	1500602888	LH SCISSOR ASSY DOUBLE STEP SKIRT 2015	175,70
4	1500602889	RH SCISSOR ASSY DOUBLE STEP SKIRT 2015	175,70
5	1500602890	DRIVING ROD D12V500 SKIRT 2015	83,50
	1500602891	DRIVING ROD D12V650 SKIRT 2015	88,70
6	1500602892	FRAME CON. TUBE D12V500 SKIRT 2015 – 2PC	20,00
	1500602893	FRAME CON. TUBE D12V650 SKIRT 2015 – 2PC	24,20
7	1500602894	FOOT BOARD DOUBLE STEP12V500 SKIRT 2015 – 2PC	102,60
	1500602895	FOOT BOARD DOUBLE STEP12V650 SKIRT 2015 – 2PC	115,40
10	1500602718	REPAIR KIT PINION DOUBLE STEP SKIRT	43,10
11	1500603102	REPAIR FIXATION KIT SKIRT CLOSING	59,30
	1500603811	REPAIR FIXATION KIT SKIRT CLOSING ISMOVE	59,30
12	1500603117	SKIRT FIXATION - 2PC	14,90

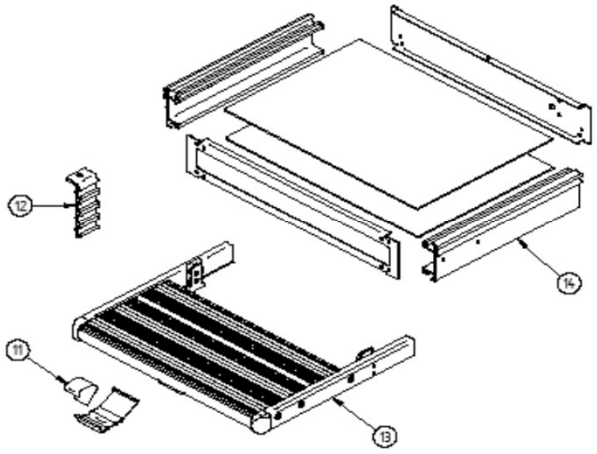

THULE Slide out manual SDA618-00

	ART.NR.	DESCRIPTION	RETAIL € (ex.VAT)
11	1500600427	LOCK SLIDE OUT MANUAL	5,80
12	1500601157	FIXATION KIT SLIDE OUT MANUAL	21,80
13	1500601779	FOOTBOARD COMPL. SLIDE OUT MANUAL	109,10
14	1500601969	FRAME SLIDE OUT MANUAL	93,90

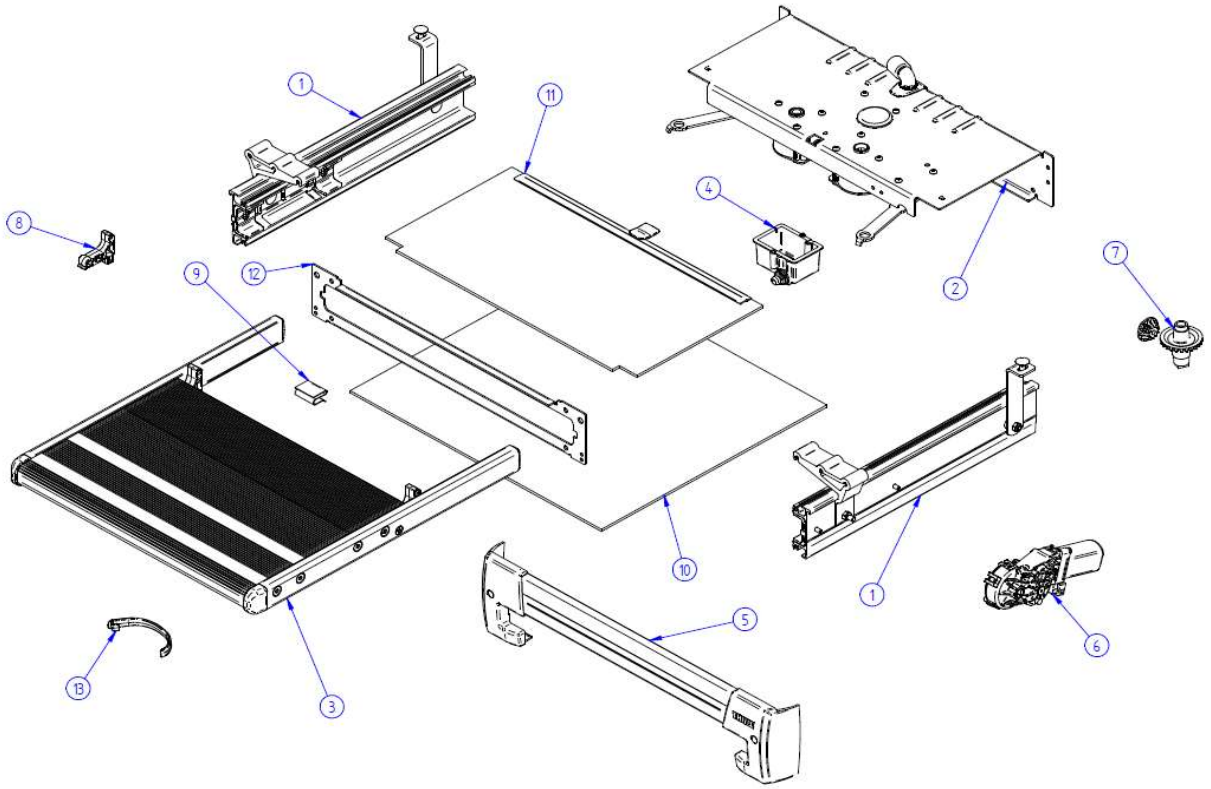

THULE Slide Out V19 12V DU/JU/BO SDC603-01

	ART.NR.	DESCRIPTION	RETAIL € (ex.VAT)
1	1500603244	FRAME SLIDE OUT V19 DUC/JUMP/BOX - 400	88,10
	1500603245	FRAME SLIDE OUT V19 DUC/JUMP/BOX - 550	95,80
	1500603246	FRAME SLIDE OUT V19 DUC/JUMP/BOX - 700	103,30
2	1500603236	MOTOR COMPLETE SO V19 CRAFTER - 400	187,30
	1500603229	MOTOR COMPLETE SO V19 CRAFTER - 550	193,80
	1500603237	MOTOR COMPLETE SO V19 CRAFTER - 700	232,90
3	1500603247	FOOTBOARD COMPLETE SO V19 DUC/JUMP/BOX - 400	125,80
	1500603248	FOOTBOARD COMPLETE SO V19 DUC/JUMP/BOX - 550	151,00
	1500603249	FOOTBOARD COMPLETE SO V19 DUC/JUMP/BOX - 700	176,30
4	1500603129	ALARMSWITCH SLIDE OUT V16	16,20
5	1500603238	FRONT PROTECTION SLIDE-OUT V19 - 400	22,70
	1500603230	FRONT PROTECTION SLIDE-OUT V19 - 550	27,80
	1500603239	FRONT PROTECTION SLIDE-OUT V19 - 700	32,80
6	1500602744	12V MOTOR SLIDE OUT 2012	90,80
7	1500602745	REPAIR KIT PINION SLIDE-OUT 2012	17,40
8	1500602746	END STOP FOOTBOARD SLIDE OUT 2012	9,90
9	1500602752	FIXATION SPRING PROTECTION COVER - 6PCS	11,90
10	1500603250	LOWER PROTECTION SLIDE-OUT V19 DUC/JUMP/BOX - 400	29,30
	1500603251	LOWER PROTECTION SLIDE-OUT V19 DUC/JUMP/BOX - 550	30,50
	1500603252	LOWER PROTECTION SLIDE-OUT V19 DUC/JUMP/BOX - 700	35,30
11	1500603253	UPPER PROT SLIDE-OUT V19 DUC/JUMP/BOX + LIP PROFILE - 400	Not available
	1500603254	UPPER PROT SLIDE-OUT V19 DUC/JUMP/BOX + LIP PROFILE - 550	Not available
	1500603255	UPPER PROT SLIDE-OUT V19 DUC/JUMP/BOX + LIP PROFILE - 700	32,80
12	1500603242	FRONT PLATE SLIDE OUT V19 - 400	20,20
	1500603232	FRONT PLATE SLIDE OUT V19 - 550	22,70
	1500603243	FRONT PLATE SLIDE OUT V19 - 700	25,20
13	1500603404	SAFETY HOOK FOOTBOARD SO	6,20
14	1500603133	REAR FIXATION PROFILE SLIDE OUT 2016 DUCATO	37,30

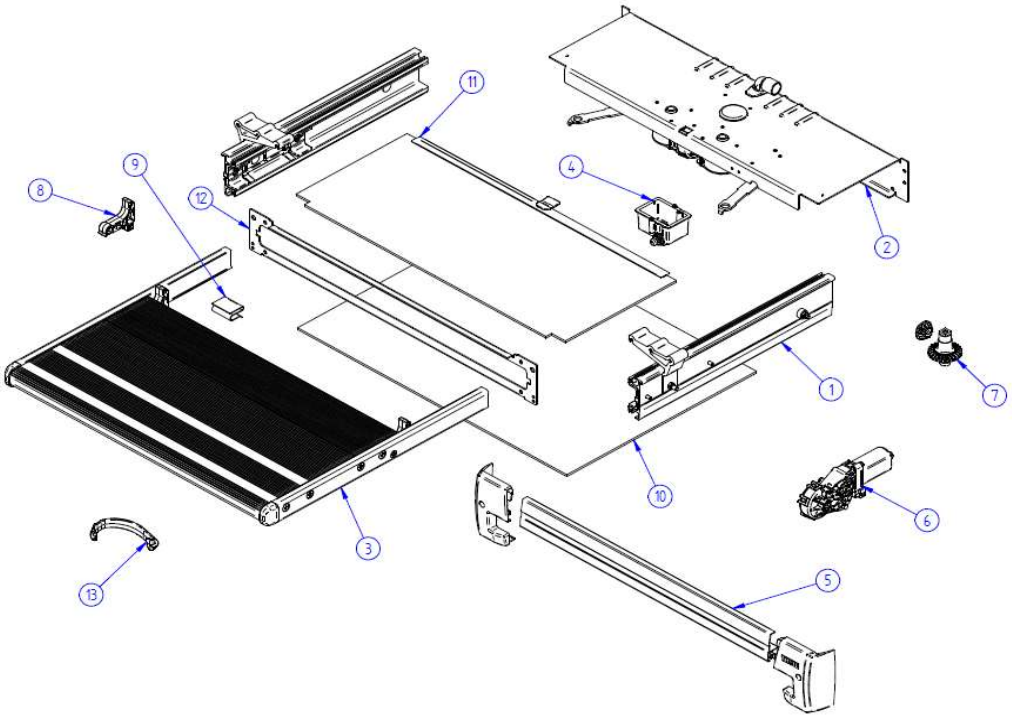

THULE Slide Out V19 12V CRAFTER SDC602-01

	ART.NR.	DESCRIPTION	RETAIL € (ex.VAT)
1	1500603234	FRAME SLIDE OUT V19 CRAFTER - 400	85,70
	1500603228	FRAME SLIDE-OUT V19 CRAFTER - 550	93,20
	1500603235	FRAME SLIDE OUT V19 CRAFTER - 700	100,70
2	1500603236	MOTOR COMPLETE SO V19 CRAFTER - 400	187,30
	1500603229	MOTOR COMPLETE SO V19 CRAFTER - 550	193,80
	1500603237	MOTOR COMPLETE SO V19 CRAFTER - 700	232,90
3	1500603126	FOOTBOARD COMPL. SLIDE OUT 400 2016	125,80
	1500603127	FOOTBOARD COMPL. SLIDE OUT 550 2016	151,00
	1500603128	FOOTBOARD COMPL. SLIDE OUT 700 2016	176,30
4	1500603129	ALARMSWITCH SLIDE OUT V16	16,20
5	1500603238	FRONT PROTECTION SLIDE-OUT V19 - 400	22,70
	1500603230	FRONT PROTECTION SLIDE-OUT V19 - 550	27,80
	1500603239	FRONT PROTECTION SLIDE-OUT V19 - 700	32,80
6	1500602744	12V MOTOR SLIDE OUT 2012	90,80
7	1500602745	REPAIR KIT PINION SLIDE-OUT 2012	17,40
8	1500602746	END STOP FOOTBOARD SLIDE OUT 2012	9,90
9	1500602752	FIXATION SPRING PROTECTION COVER - 6PCS	11,90
10	1500603130	LOWER PROTECTION SLIDE OUT V12 12V 400	31,20
	1500603131	LOWER PROTECTION SLIDE OUT V12 12V 550	33,30
	1500603132	LOWER PROTECTION SLIDE OUT V12 12V 700	35,30
11	1500603240	UPPER PROTECTION SLIDE OUT V12 12V 400 + LIP PROFILE	Not available
	1500603231	UPPER PROTECTION SLIDE OUT V12 12V 550 + LIP PROFILE	29,80
	1500603241	UPPER PROTECTION SLIDE OUT V12 12V 700 + LIP PROFILE	Not available
12	1500603242	FRONT PLATE SLIDE OUT V19 - 400	20,20
	1500603232	FRONT PLATE SLIDE OUT V19 - 550	22,70
	1500603243	FRONT PLATE SLIDE OUT V19 - 700	25,20
13	1500603404	SAFETY HOOK FOOTBOARD SO	6,20

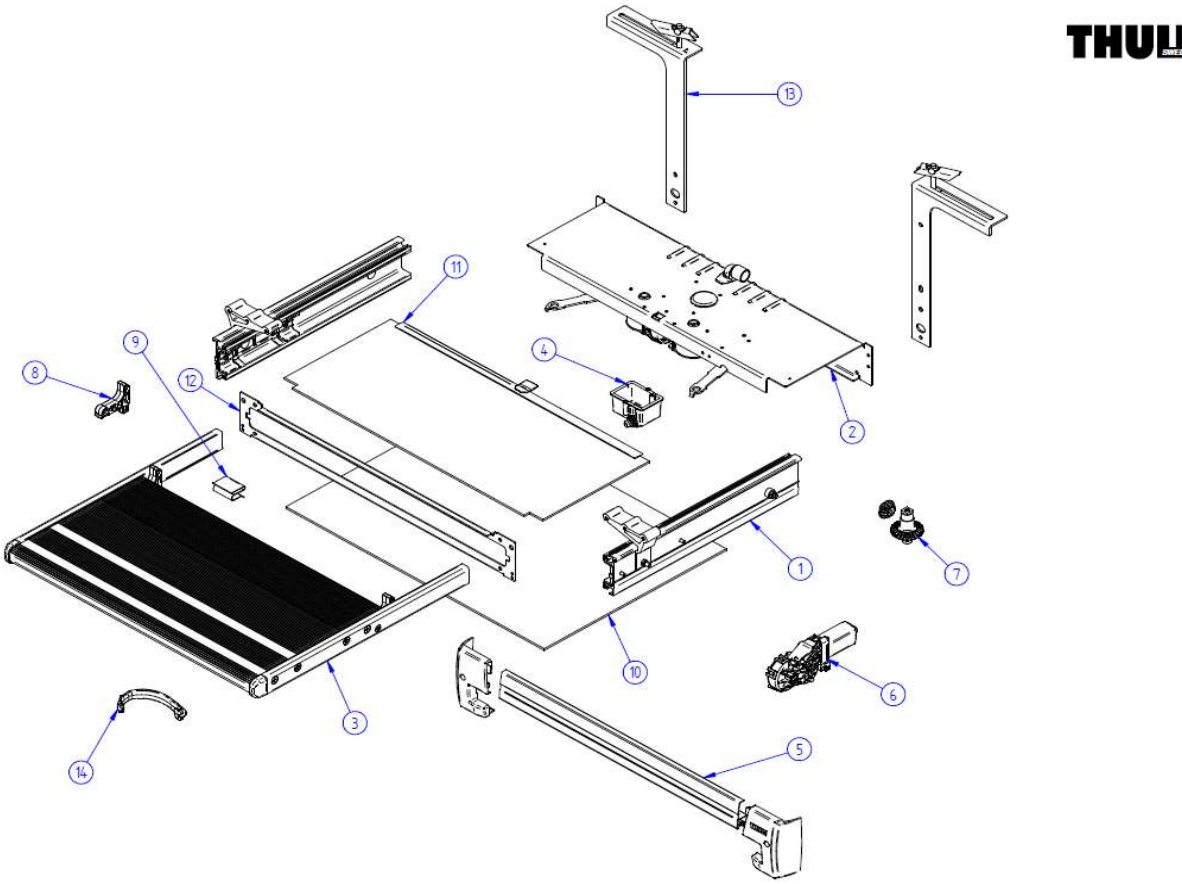

THULE Slide Out Crafter 12v550 V19 SDC601-01

	ART.NR.	DESCRIPTION	RETAIL € (ex.VAT)
1	1500603228	FRAME SLIDE-OUT V19 CRAFTER - 550	93,20
2	1500603229	MOTOR COMPLETE SO V19 - 550	193,80
3	1500603127	FOOTBOARD COMPLETE SO V16 - 550	151,00
4	1500603129	ALARMSWITCH SLIDE-OUT V16	16,20
5	1500603230	FRONT PROTECTION SLIDE-OUT V19 - 550	27,80
6	1500602744	12V MOTOR SLIDE OUT 2012	90,80
7	1500602745	REPAIR KIT PINION SLIDE-OUT 2012	17,40
8	1500602746	END STOP FOOTBOARD SLIDE OUT 2012	9,90
9	1500602752	FIXATION SPRING PROTECTION COVER - 6PCS	11,90
10	1500603131	LOWER PROTECTION SLIDE OUT V12 12V550	33,30
11	1500603231	UPPER PROTECTION SLIDE OUT V12 12V550 + LIP PROFILE	29,80
12	1500603232	FRONT PLATE SLIDE OUT V19 - 550	22,70
13	1500603233	MOUNTING BRACKETS + TOGGLE BOLTS FOR CRAFTER 4WD	39,10
14	1500603404	SAFETY HOOK FOOTBOARD SO	6,20

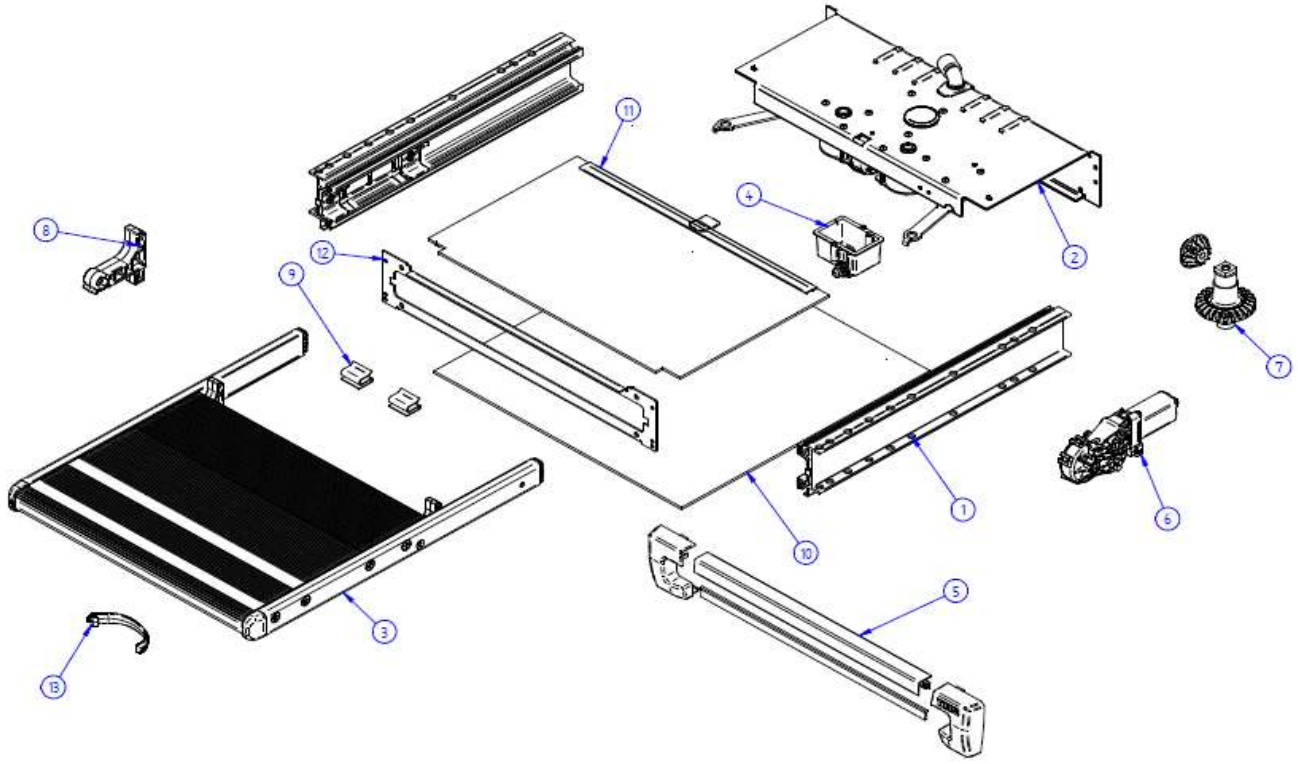

	ART.NR.	DESCRIPTION	RETAIL € (ex.VAT)
1	1500603377	FRAME SLIDE OUT 400 V18	88,10
	1500603378	FRAME SLIDE OUT 460 V18 (*)	Not available
	1500603379	FRAME SLIDE OUT 550 V18	95,80
	1500603380	FRAME SLIDE OUT 700 V18	103,30
2	1500603236	MOTOR COMPLETE SO V19 - 400	187,30
	1500603381	MOTOR COMPLETE SO V19 - 460 (*)	Not available
	1500603229	MOTOR COMPLETE SO V19 - 550	193,80
	1500603237	MOTOR COMPLETE SO V19 - 700	232,90
3	1500603382	FOOTBOARD COMPL. SLIDE OUT 400 V18	125,80
	1500603383	FOOTBOARD COMPL. SLIDE OUT 460 V18 (*)	Not available
	1500603384	FOOTBOARD COMPL. SLIDE OUT 550 V18	151,00
	1500603385	FOOTBOARD COMPL. SLIDE OUT 700 V18	176,30
4	1500603129	ALARMSWITCH SLIDE OUT V16	16,20
5	1500603386	FRONT PROTECTION SLIDE OUT 400 V18	22,70
	1500603387	FRONT PROTECTION SLIDE OUT 460 V18 (*)	25,20
	1500603388	FRONT PROTECTION SLIDE OUT 550 V18	27,80
	1500603389	FRONT PROTECTION SLIDE OUT 700 V18	32,80
6	1500602744	12V MOTOR SLIDE OUT 2012	90,80
7	1500602745	REPAIR KIT PINION SLIDE-OUT 2012	17,40
8	1500602746	END STOP FOOTBOARD SLIDE OUT 2012	9,90
9	1500602752	FIXATION SPRING PROTECTION COVER - 6PCS	11,90
10	1500603390	LOWER PROTECTION SLIDE OUT V18 12V 400	31,20
	1500603391	LOWER PROTECTION SLIDE OUT V18 12V 460 (*)	32,30
	1500603392	LOWER PROTECTION SLIDE OUT V18 12V 550	33,30
	1500603393	LOWER PROTECTION SLIDE OUT V18 12V 700	35,30
11	1500603394	UPPER PROTECTION SLIDE OUT V18 12V 400 + LIP PROFILE	Not available
	1500603395	UPPER PROTECTION SLIDE OUT V18 12V 460 + LIP PROFILE (*)	Not available
	1500603396	UPPER PROTECTION SLIDE OUT V18 12V 550 + LIP PROFILE	Not available
	1500603397	UPPER PROTECTION SLIDE OUT V18 12V700 + LIP PROFILE	Not available

12	1500603242	FRONT PLATE SLIDE OUT V19 - 400	20,20
	1500603398	FRONT PLATE SLIDE OUT V19 - 460 (*)	21,40
	1500603232	FRONT PLATE SLIDE OUT V19 - 550	22,70
	1500603243	FRONT PLATE SLIDE OUT V19 - 700	25,20
13	1500603404	SAFETY HOOK FOOTBOARD SO	6,20
	(*)	460 = Special Step : Carthago	

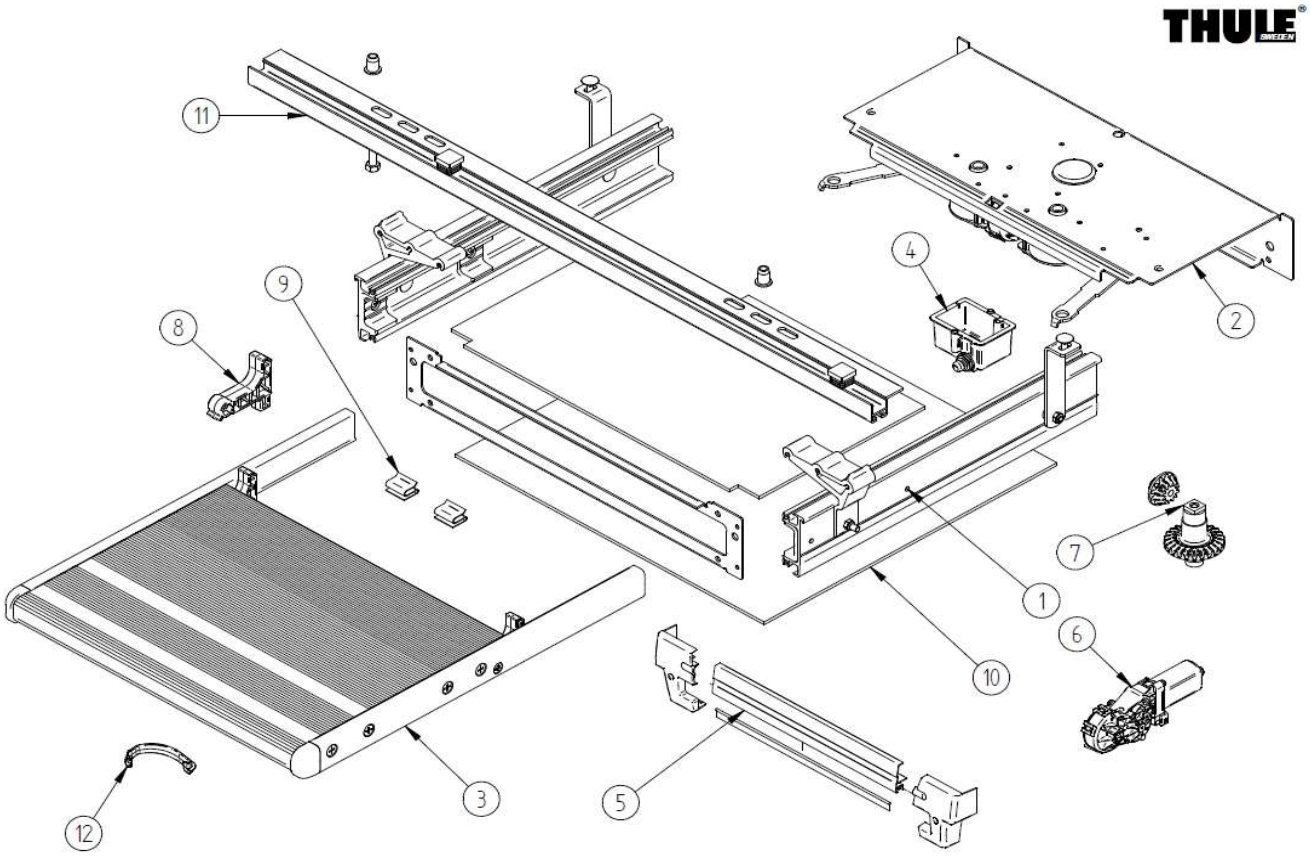

THULE Slide out Ducato V16 SDB613-02

	ART.NR.	DESCRIPTION	RETAIL € (ex.VAT)
1	1500603120	FRAME SLIDE OUT 400 2016 DUCATO	Not available
	1500603121	FRAME SLIDE OUT 550 2016 DUCATO	Not available
	1500603122	FRAME SLIDE OUT 700 2016 DUCATO	Not available
2	1500603123	MOTOR COMPLETE S/O 400 2016	245,00
	1500603124	MOTOR COMPLETE S/O 550 2016	245,00
	1500603125	MOTOR COMPLETE S/O 700 2016	251,80
3	1500603126	FOOTBOARD COMPL. SLIDE OUT 400 2016	125,80
	1500603127	FOOTBOARD COMPL. SLIDE OUT 550 2016	151,00
	1500603128	FOOTBOARD COMPL. SLIDE OUT 700 2016	176,30
4	1500603129	ALARMSWITCH SLIDE OUT V16	16,20
5	1500602741	FRONT PROTECTION SLIDE OUT 400 2012 VAN	38,10
	1500602742	FRONT PROTECTION SLIDE OUT 550 2012 VAN	42,10
	1500602743	FRONT PROTECTION SLIDE OUT 700 2012 VAN	45,40
6	1500602744	12V MOTOR SLIDE OUT 2012	90,80
7	1500602745	REPAIR KIT PINION SLIDE-OUT 2012	17,40
8	1500602746	END STOP FOOTBOARD SLIDE OUT 2012	9,90
9	1500602752	FIXATION SPRING PROTECTION COVER - 6PCS	11,90
10	1500603130	LOWER PROTECTION SLIDE OUT V12 12V400	31,20
	1500603131	LOWER PROTECTION SLIDE OUT V12 12V550	33,30
	1500603132	LOWER PROTECTION SLIDE OUT V12 12V700	35,30
11	1500603133	REAR FIXATION PROFILE SLIDE OUT 2016 DUCATO	37,30
12	1500603404	SAFETY HOOK FOOTBOARD SO	6,20

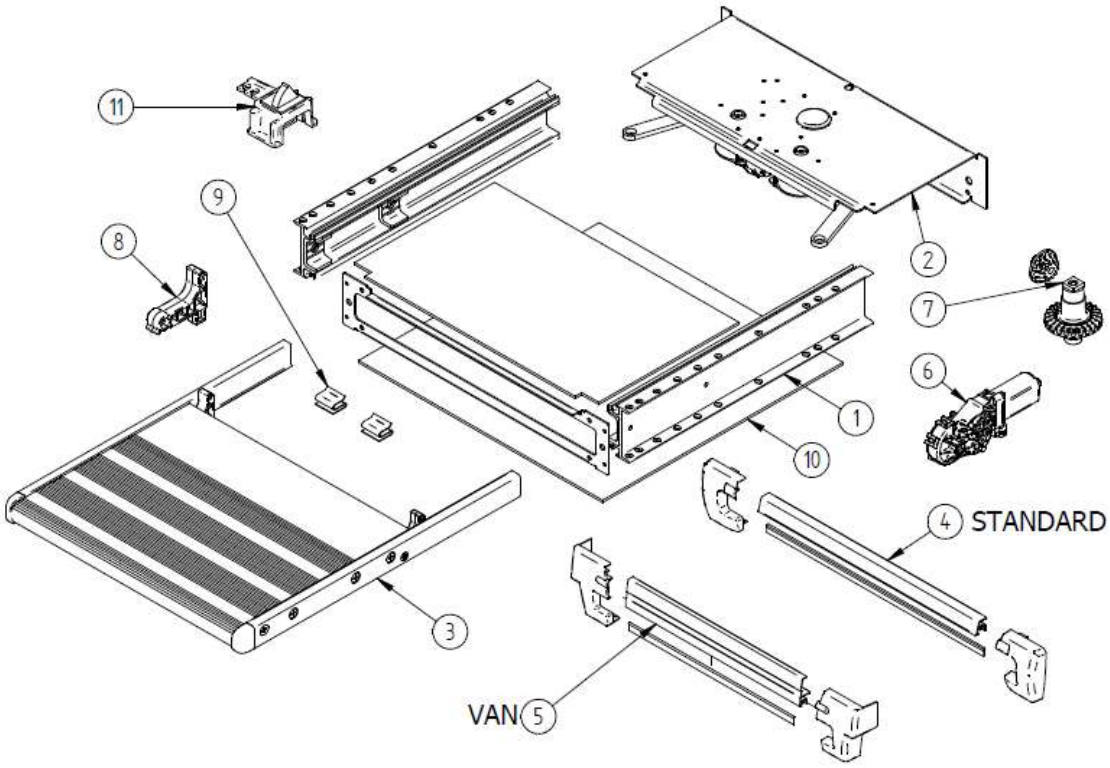

THULE Slide out 12V 2012 SDB612-03

	ART.NR.	DESCRIPTION	RETAIL € (ex.VAT)
1	1500602729	FRAME SLIDE OUT 400 2012	Not available
	1500602730	FRAME SLIDE OUT 550 2012	Not available
	1500602731	FRAME SLIDE OUT 700 2012	Not available
2	1500602732	MOTOR COMPLETE S/O 400 2012	245,00
	1500602733	MOTOR COMPLETE S/O 550 2012	Not available
	1500602734	MOTOR COMPLETE S/O 700 2012	251,80
3	1500602735	FOOTBOARD COMPL. SLIDE OUT 400 2012	125,80
	1500602736	FOOTBOARD COMPL. SLIDE OUT 550 2012	151,00
	1500602737	FOOTBOARD COMPL. SLIDE OUT 700 2012	176,30
4	1500602738	FRONT PROTECTION SLIDE OUT 400 2012	36,80
	1500602739	FRONT PROTECTION SLIDE OUT 550 2012	40,70
	1500602740	FRONT PROTECTION SLIDE OUT 700 2012	44,00
5	1500602741	FRONT PROTECTION SLIDE OUT 400 2012 VAN	38,10
	1500602742	FRONT PROTECTION SLIDE OUT 550 2012 VAN	42,10
	1500602743	FRONT PROTECTION SLIDE OUT 700 2012 VAN	45,40
6	1500602744	12V MOTOR SLIDE OUT 2012	90,80
7	1500602745	REPAIR KIT PINION SLIDE-OUT 2012	17,40
8	1500602746	END STOP FOOTBOARD SLIDE OUT 2012	9,90
9	1500602752	FIXATION SPRING PROTECTION COVER - 6PCS	11,90
10	1500602803	LOWER PROTECTION SLIDE OUT V12 12V400	Not available
	1500602804	LOWER PROTECTION SLIDE OUT V12 12V550	33,30
	1500602805	LOWER PROTECTION SLIDE OUT V12 12V700	35,30
11	1500603111	ALARMSWITCH SLIDE OUT V12	13,90

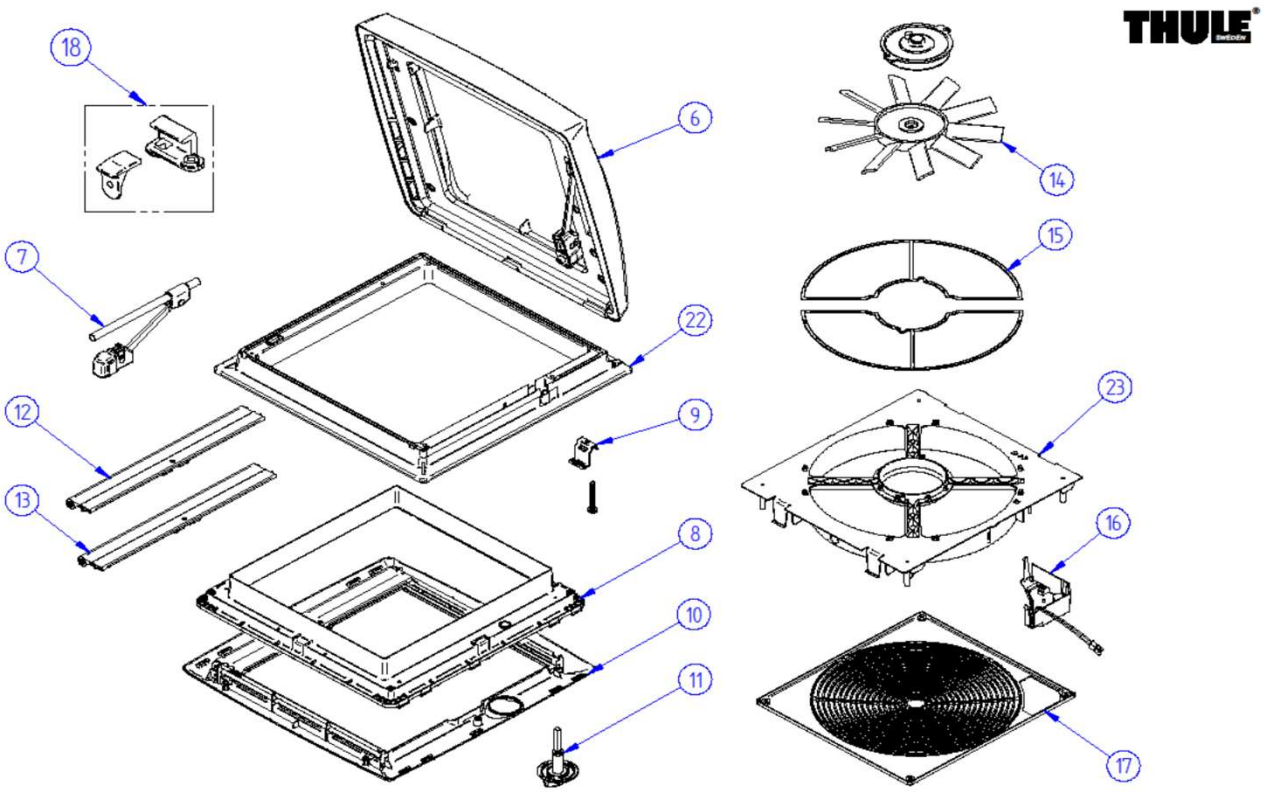

THULE Omnivent V04

DL609-01

	ART.NR.	DESCRIPTION	RETAIL € (ex.VAT)
6	1500601443	DOME WHITE + OPERATION DEVICE	58,00
	1500601444	DOME TRANSL + OPERATION DEVICE	58,00
7	1500601364	OPERATING DEVICE	25,20
8	1500601786	INNER HATCH FRAME CREAM	11,90
9	1500600694	HARDWARE PACK. OMNIVENT V04	10,20
10	308229	RETROFIT CURTAIN FRAME V04	See price list
11	1500600712	OPERATING KNOB CREAM ASSY	6,30
12	1500600709	ROLLO MOSQUITO ASSY	17,20
13	1500600710	ROLLO CREAM ASSY	21,40
14	1500600700	MOTOR + FAN BLADE VENTILATOR	98,30
15	1500601718	SET MOSQUITO NET VENTILATOR	16,00
16	1500601719	ELECTR STEERING V08	67,00
17	1500601720	VENTILATOR GRID V08	14,90
18	1500600719	RETROFIT LOCK	4,40
22	1500600698	OUTER HATCH FRAME+HINGE	18,60
23	1500602392	VENTILATOR FRAME >2008 NEW	22,30

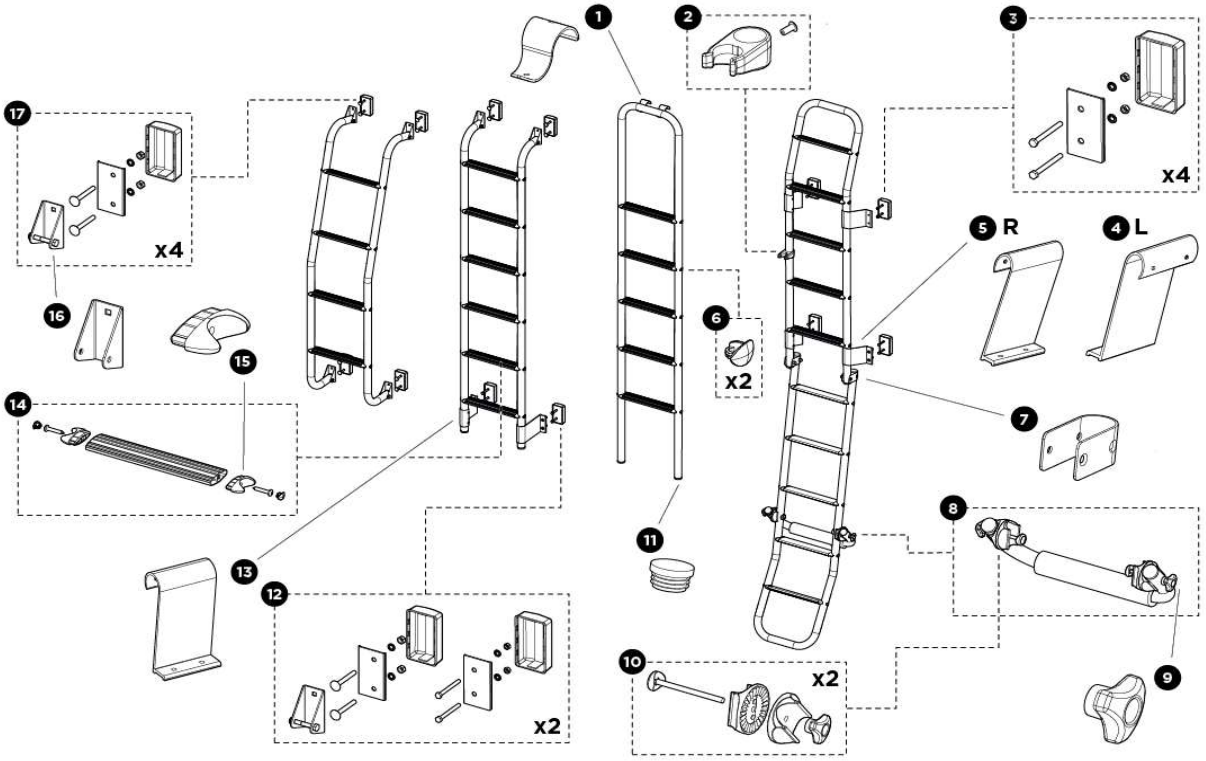

Thule Ladders (LAD)
OS_07LAD0001-00_Thule_Ladders_SP-List
09/01/2023

	ART.NR.	DESCRIPTION	RETAIL € (ex.VAT)
1	1500602037	BEDHOOK	13,90
2	1500603774	TUBE CLIP DOUBLE LADDER BLACK	4,40
3	1500600525	FIXATION KIT LADDER DOUBLE 10S	29,50
4	1500600517	LH LADDER SUPPORT - 80MM/20	10,60
5	1500600518	RH LADDER SUPPORT - 80MM/20	10,60
6	1500603775	COVER PLUG LADDER BLACK	2,20
7	1500602036	HINGE DOUBLE LADDER	13,90
8	1500603779	BUMPER DOUBLE LADDER BLACK	52,50
9	1500603527	KNOB WITH NUT BLACK 2PC	7,60
10	1500603777	BUMPER ADJUSTMENT DOUBLE LADDER BLACK	17,80
11	1500602038	TUBE PLUG BLACK Ø30	1,30
12	1500600526	FIXATION KIT LADDER SINGLE 6S	34,80
13	1500600519	LADDER SUPPORT - 80MM	10,60
14	1500603778	RUNG LADDER BLACK	10,60
15	1500603776	ENDCAP RUNG LADDER BLACK 2pcs	4,80
16	1500601979	FOOT SUPPORT OMNIBIKE D30	7,60
17	1500602045	FIXATION KIT LADDER 4 STEPS	45,90

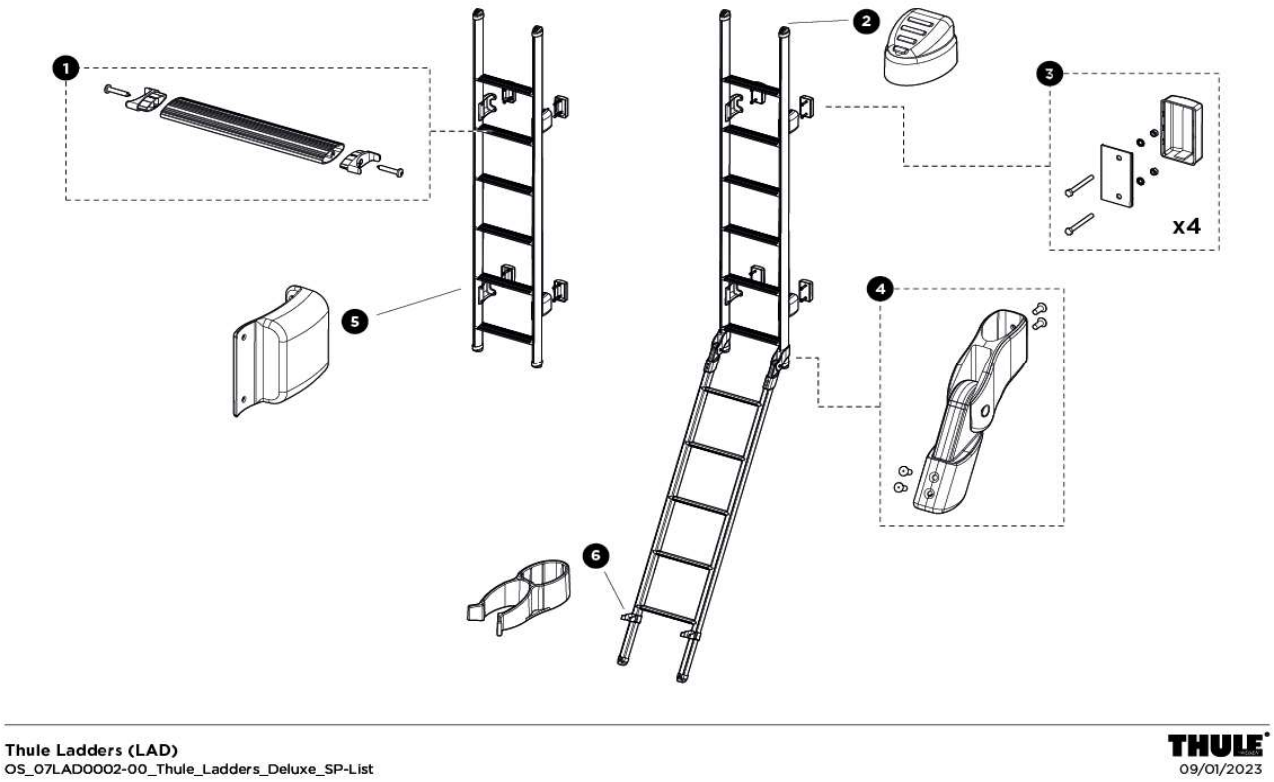

	ART.NR.	DESCRIPTION	RETAIL € (ex.VAT)
1	1500600528	RUNG OMNILADDER	10,90
2	1500602041	OVAL PLUG OMNILADDER DELUXE	1,80
3	1500603780	FIXATION KIT LADDER DELUXE	34,80
4	1500600529	HINGE OVAL OMNILADDER DELUXE	44,00
5	1500600527	SUPPORT OVAL OMNILADDER DELUXE	11,60
6	1500602042	OVAL CLIP OMNILADDER DELUXE	4,40

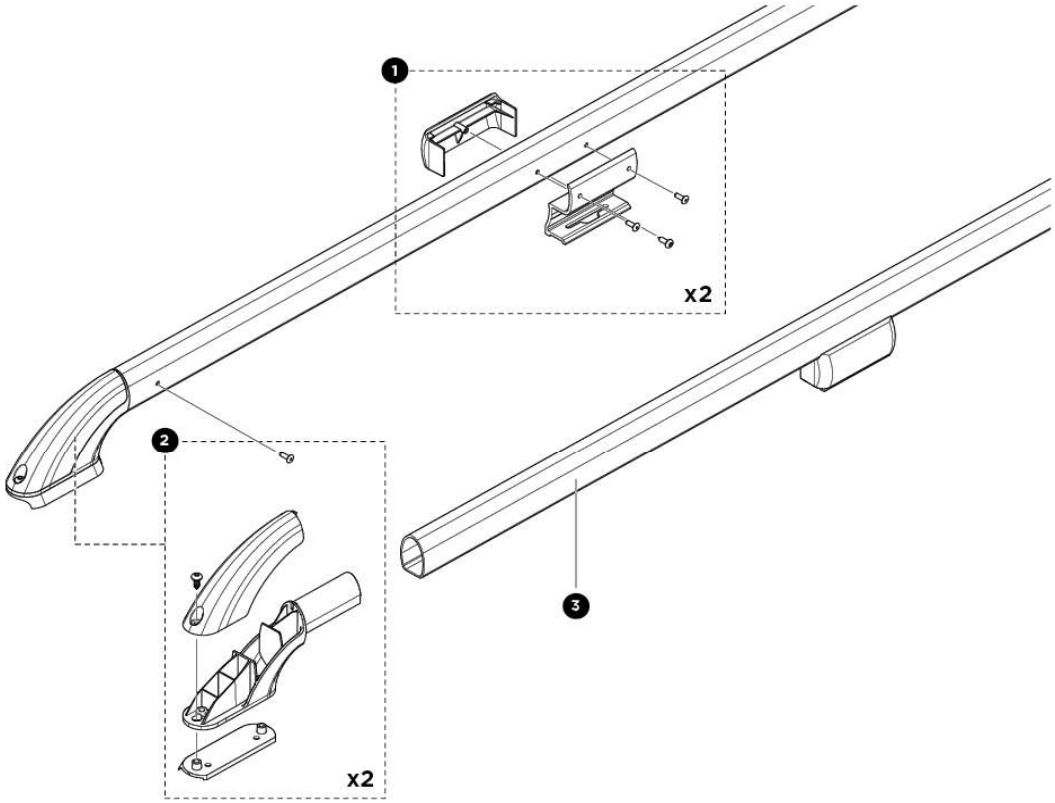

Thule Roof Rack (RRA)
OS_14RRA0001-00_Thule-Roof-Racks_SP-List
09/01/2023

	ART.NR.	DESCRIPTION	RETAIL € (ex.VAT)
1	1500600522	SUPPORT ROOF RACK ASSY WHITE	31,50
	1500600524	SUPPORT ROOF RACK ASSY GREY	31,50
2	1500600521	ENDCAP ROOF RACK ASSY WHITE	35,60
	1500600523	ENDCAP ROOF RACK ASSY GREY	35,60
3	1500601759	OVAL TUBE L=3.0M WHITE	51,20
	1500601782	OVAL TUBE L=3.0M ANO	51,20

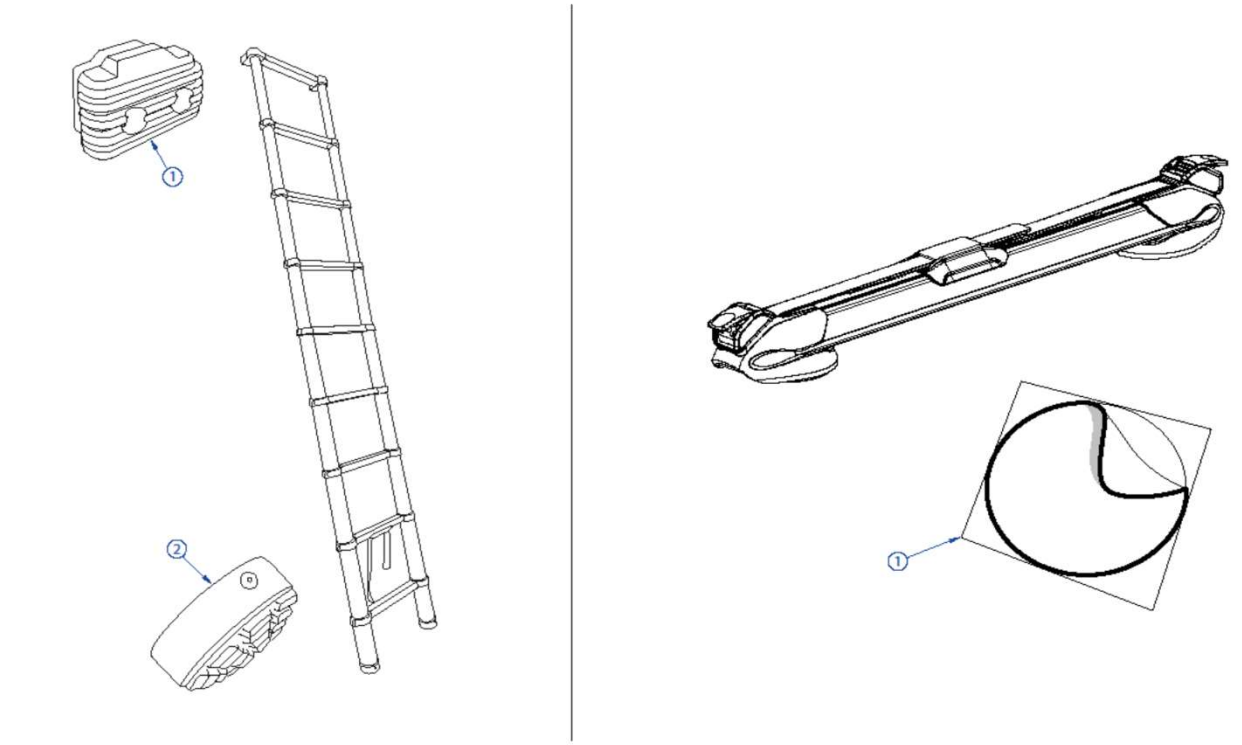

THULE Ladder Fixation Kit LD611-01

	ART.NR.	DESCRIPTION	RETAIL € (ex.VAT)
		Telescopic ladder	
1	1500603530	TELESCOPIC LADDER BUMPER - 2 PCS	8,80
2	1500603529	TELESCOPIC LADDER FEET - 2PCS	8,80
		Fixation Kit	
1	1500603147	PROTECTIVE PATCHES LADDER (4PCS)	8,80

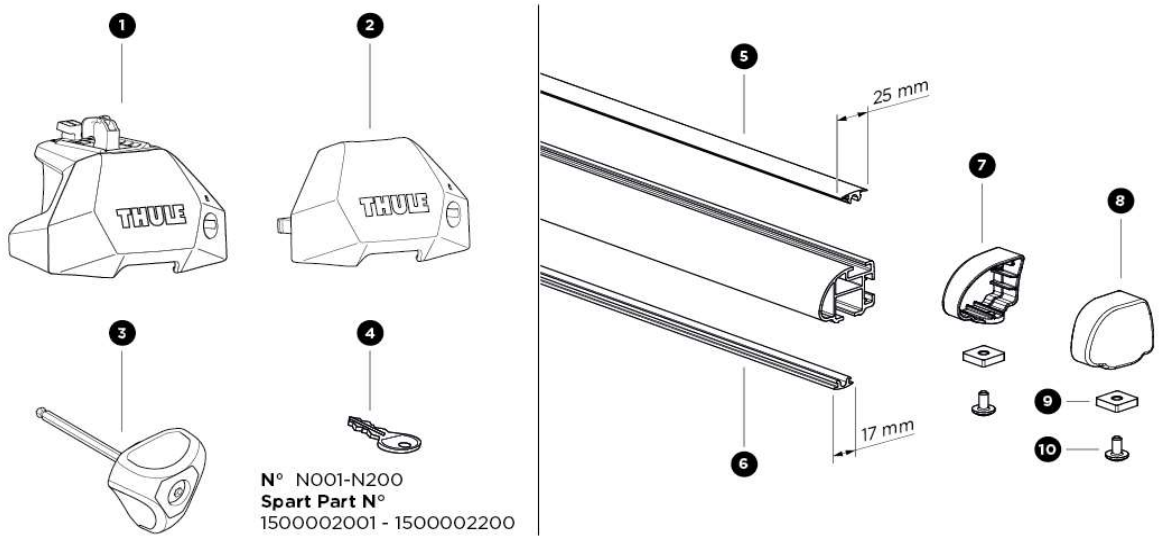

Thule Fixpoint Evo (COS)
OS_10COS0002-00_Thule-Fixpoint-Evo_SP-List
27/12/2022

	ART.NR.	DESCRIPTION	RETAIL € (ex.VAT)
1	1500054648	THULE EVO FIXPOINT - COMPLETE FOOT	25,00
2	1500054649	THULE EVO FIXPOINT - FRONT COVER	8,20
3	1500052988	TORQUE KEY 4NM - THULE RAISED RAIL EVO / FLUSH RAIL EDGE / FIXP	9,80
4	1500002XXX	KEY N° XXX	20,30
5	1500050834	RUBBER PROFILE PROBAR 25mm - 2190mm (1 PCS)	12,60
6	1500050836	RUBBER PROFILE PROBAR 17mm - 2190mm (1 PCS)	11,40
7	1500050843	END CAP PROBAR - LEFT (1 PCS)	1,60
8	1500050844	END CAP PROBAR - RIGHT (1 PCS)	1,60
9	1500050845	SQUARE NUT M6 (1 PCS)	1,60
10	1500051152	HEXAGONAL SCREW K6S (1 PCS)	1,60

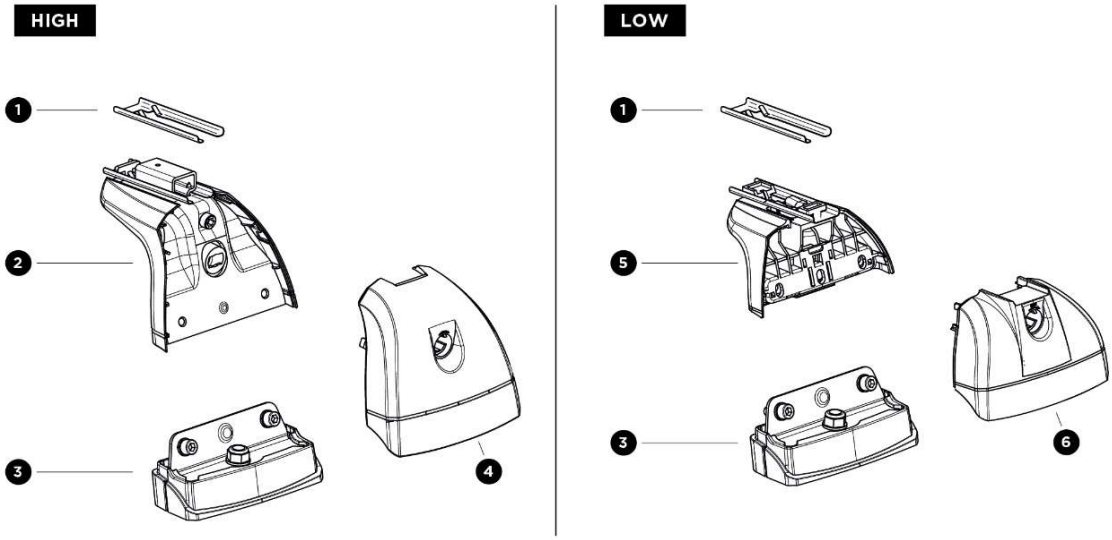

Thule Probar Flex (COS)
OS_10COS0001-00_Thule-Probar-Flex_SP-List
23/12/2022

	ART.NR.	DESCRIPTION	RETAIL € (ex.VAT)
1	1500603179	REINFORCEMENT FORK (4 PCS)	29,30
2	1500603180	FOOT FIXPOINT 751 HIGH WITH FORK (1 PCS)	27,80
3	1500603181	FOOT PAD WITH FASTNERS LOW/HIGH (1 PCS)	13,90
4	1500050004	OUTER COVER FIXPOINT 751 HIGH (1 PCS)	12,00
5	1500603182	FOOT FIXPOINT 753 LOW WITH FORK (1 PCS)	24,00
6	1500050090	OUTER COVER FIXPOINT 753 LOW (1 PCS)	10,20

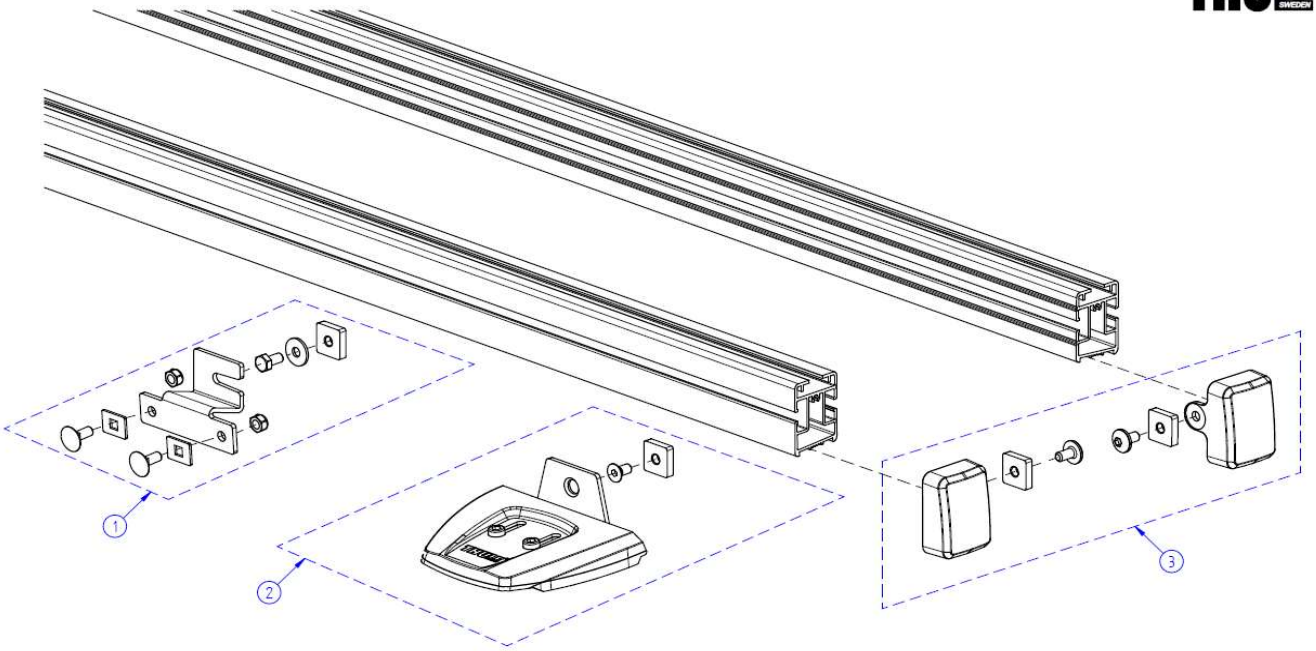

THULE SmartClamp System
ADR608-00

	ART.NR.	DESCRIPTION	RETAIL € (ex.VAT)
1	1500603183	BASE RAIL CONNECTOR (1 PCS)	18,90
2	1500603184	SMART CLAMP DUCATO H2 (1 PCS)	37,80
3	1500603185	BASE RAIL COVERS - LEFT/RIGHT	10,20

PRINTED ON PACKAGING THULE LOCKS

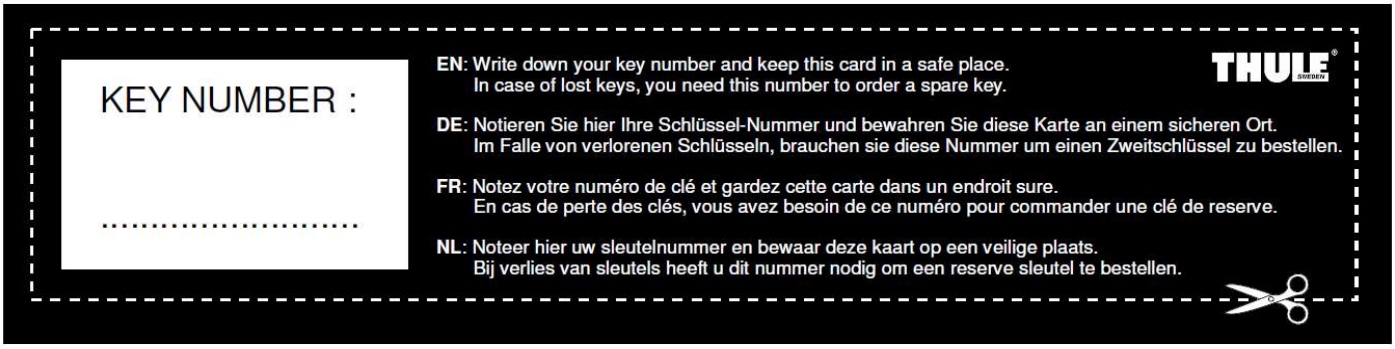

	ART.NR.	DESCRIPTION	RETAIL € (ex.VAT)
	1500602975	BLANK KEY TYPE L FOR DOOR LOCKS (1x)	10,40
	1500602976	BLANK KEY TYPE V FOR DOOR LOCKS (1x)	10,40
	1500602260	KEY NUMBER KNOWN - SPARE KEYS FOR DOOR LOCKS (2 PCS)	43,30
	1500602681	KEY NUMBER UNKNOWN - NEW LOCK CYLINDER + 2 KEYS	30,00

	ART.NR.	DESCRIPTION	RETAIL € (ex.VAT)
	1500601685	BAG FOR LEVELERS (BLACK)	19,20

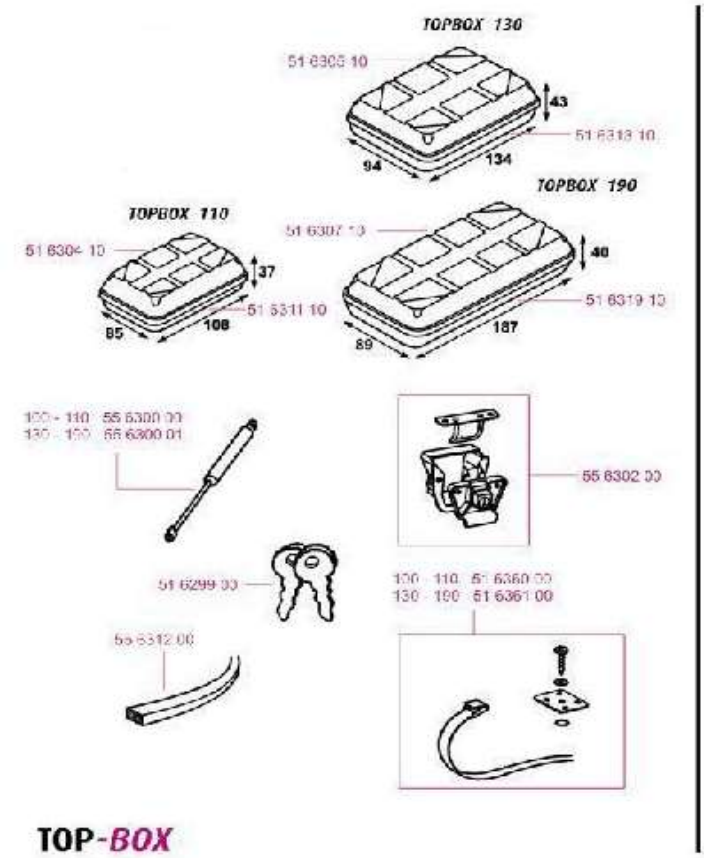

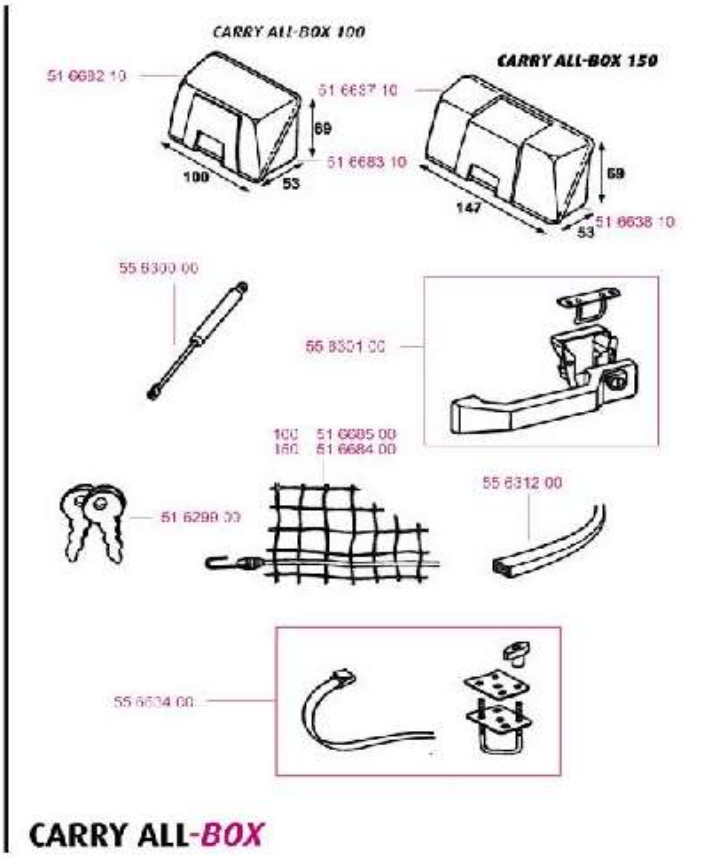

	ART.NR.	DESCRIPTION	RETAIL € (ex.VAT)
51629900	1500600377	SET OF 2 KEYS TOP-BOX	26,50
51630410	1500601725	TO BOX 110 COVER WHITE	Not available
51630510	1500601723	TOP BOX 130 COVER WHITE	Not available
51630710	1500601404	TOP BOX COVER 190CM	Not available
51631110	1500601724	TOP BOX 110 BOTTOM WHITE	Not available
51631310	1500601722	TOP BOX 130 BOTTOM WHITE	Not available
51631910	1500601721	TOP BOX 190 BOTTOM WHITE	Not available
51636000	1500601521	INSTAL INSTR TOP BOX 110-110	Not available
51636100	1500601472	INST INSTR TOPBOX 130 190 4pc	Not available
55630000	1500601339	GASSPRING ASSY 100N	27,00
55630001	1500601340	GAS SPRING ASSY 200N	Not available
55630200	1500601343	LOCK+PROTECTION+HOOK CLASS/TB	Not available
55631200	1500601349	FOAM RUBBER CLASS/CARALL/COMBI	10,60
51663710	1500601728	CARRY ALL BOX 150 COVER WHITE	Not available
51663810	1500601727	CARRY ALL BOX 150 BOTTOM WHITE	Not available
51668210	1500600441	CARRY ALL BOX 100 COVER	Not available
51668310	1500601726	CARRY ALL BOX 100 BOTTOM	Not available
51668400	1500601525	MESHED NET ASSY FOR CA BOX 150	Not available
51668500	1500601524	MESHED NAT ASSY CA BOX 100	Not available
55630100	1500601342	LOCK+PROTECTION+HOOK COM/CARAL	Not available
55663400	1500601353	FIXAT. MATERIAL CARRY ALL 4PC	46,10